STANLEY®
Infrastructure

Safety, Operation & Maintenance

BR67 Hydraulic Breaker

09278 User Manual 6/2019 Ver. 33

DECLARATION OF CONFORMITY
ÜBEREINSTIMMUNGS-ERKLARUNG
DECLARATION DE CONFORMITE CEE
DECLARACION DE CONFORMIDAD
DICHIARAZIONE DI CONFORMITA

STANLEY
Infrastructure

CE

I, the undersigned:
Ich, der Unterzeichnende:
Je soussigné:
El abajo firmante:
Io sottoscritto:

Nuerenberg, David

Surname and First names/Familiennname und Vornamen/Nom et prénom/Nombre y apellido/Cognome e nome

hereby declare that the equipment specified hereunder:
bestätige hiermit, daß erklaren Produkt genannten Werk oder Gerät:
déclare que l'équipement visé ci-dessous:
Por la presente declaro que el equipo se especifica a continuación:
Dichiaro che le apparecchiature specificate di seguito:

1. Category:
   Kategorie:
   Catégorie:
   Categoria:
   Categoria:
   Hydraulic Hand-held Concrete Breaker

2. Make/Marke/Marque/Marca/Marca **STANLEY**

3. Type/Typ/Type/Tipo/Tipo: **BR6713801A, BR6717801A, BR6717801AA, (BR67320 – For Underwater Use Only)**

4. Serial number of equipment:
   Seriennummer des Geräts:
   Numéro de série de l'équipement:
   Numero de serie del equipo:
   Matricola dell´attrezzatura:

BR6713801A	**All**
BR6717801A	**All**
BR6717801AA	**All**
BR6717802AA	**All**
BR67320	**Serial # 030212033 and above (For Underwater Use Only)**

5. Mass/Masse/Masse/Masa/Massa 31 kg

Has been manufactured in conformity with
Wurde hergestellt in Übereinstimmung mit
Est fabriqué conformément
Ha sido fabricado de acuerdo con
E' stata costruita in conformitá con

Directive/Standards Richtlinie/Standards Directives/Normes Directriz/Los Normas Direttiva/Norme	No. Nr Numéro No n.	Approved body Prüfung durch Organisme agréé Aprobado Collaudato
EN ISO Noise Directive Machinery Directive EN ISO EN ISO	11148-4 2000/14/EC:2005 3744:2010 2006/42/EC 28927-10 13732-1	Self AkustikNet (Notified body ID 1585) Bagsvard Hovedgade 141, 2880 Bagsvard, Denmark Certificate #863/2011/004 (Verification 2015-08-04) Valid 12-31-2018 Self Self Self

6. Special Provisions: **None**
   Spezielle Bestimmungen:
   Dispositions particulières:
   Provisiones especiales:
   Disposizioni speciali:

7. Measurements: **Measured Sound Power Level 103 LwA**
   Messungen **Guaranteed Sound Power Level 105 LwA**
   Mesures Measured in accordance to Directive 2000/14/EC,
   Mediciones Annex III, Part B, No 10, m ≥ 30
   Misurazioni

8. Representative in the Union: **Patrick Vervier**, **Stanley Dubuis 17-19, rue Jules Berthonneau-BP 3406 41034 Blois Cedex, France.**
   Vertreter in der Union/Représentant dans l'union/Representante en la Union/Rappresentante presso l'Unione

Done at/Ort/Fait à/Dado en/Fatto a STANLEY Infrastructure, Portland, Oregon USA Date/Datum/le/Fecha/Data 4-27-2018

Signature/Unterschrift/Signature/Firma/Firma

Position/Position/Fonction/Cargo/Posizione North America Quality Manager

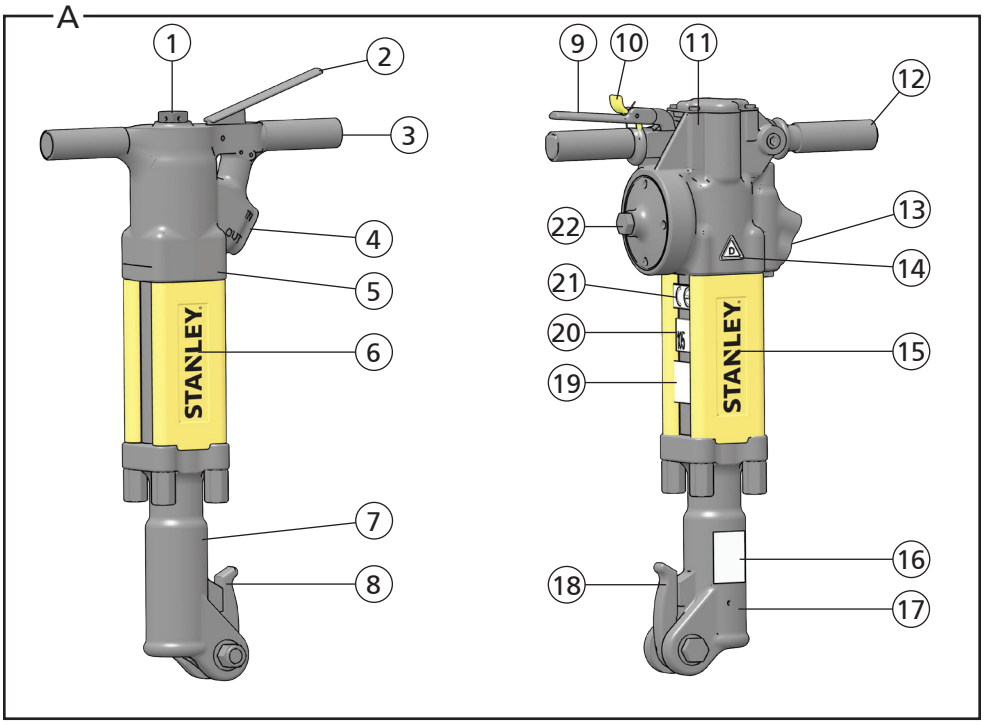
A
1
2
3
4
5
6
7
8
9
10
11
12
13
14
15
16
17
18
19
20
21
22
STANLEY

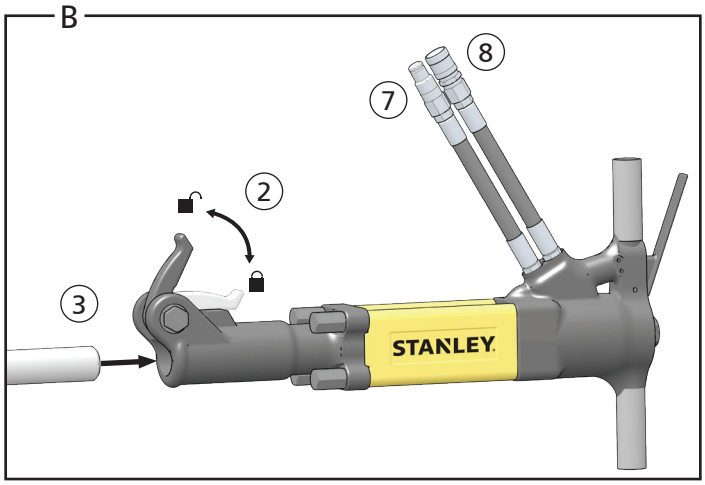
B
1
2
3
4
5
6
7
8
STANLEY

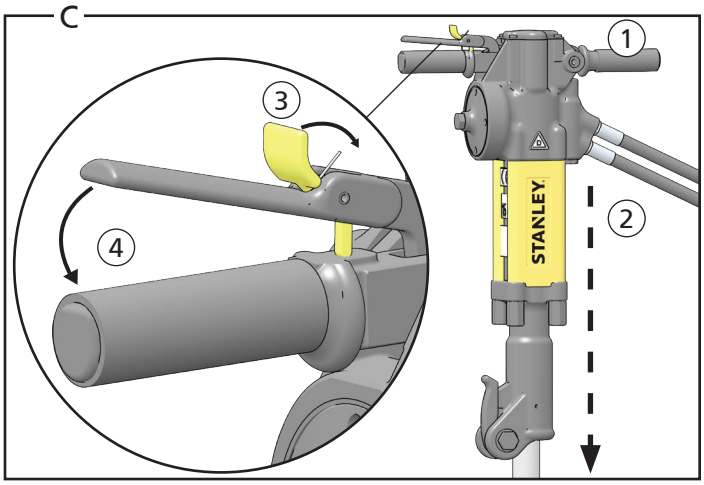
C
1
2
3
4
STANLEY

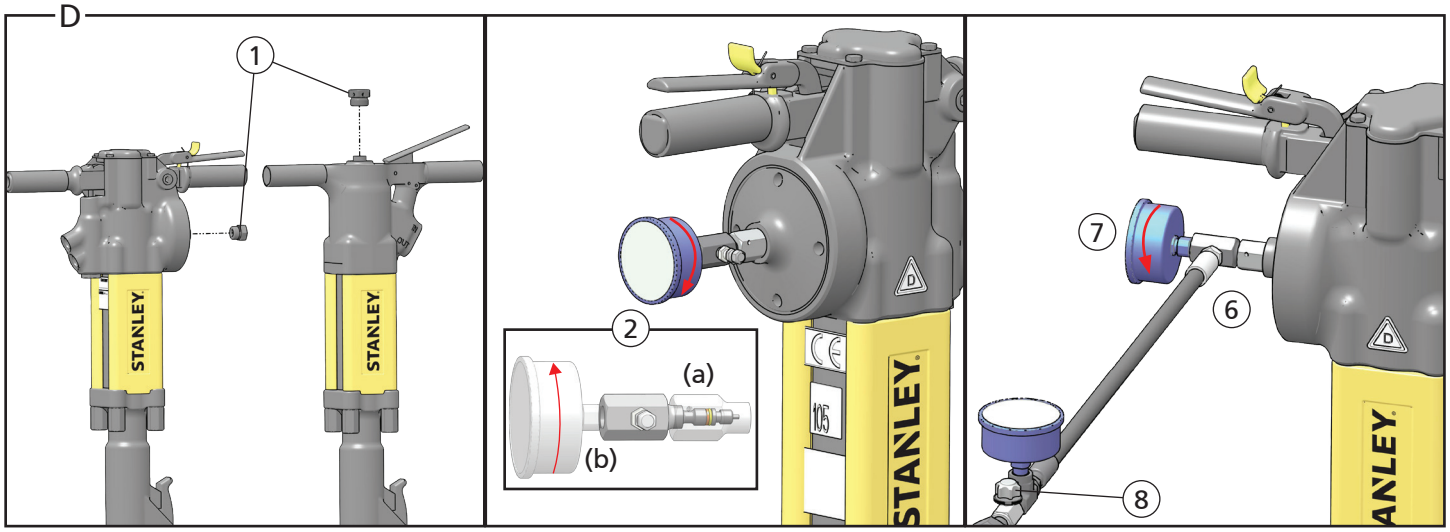
D
1
2
(a)
(b)
105
6
7
8
STANLEY

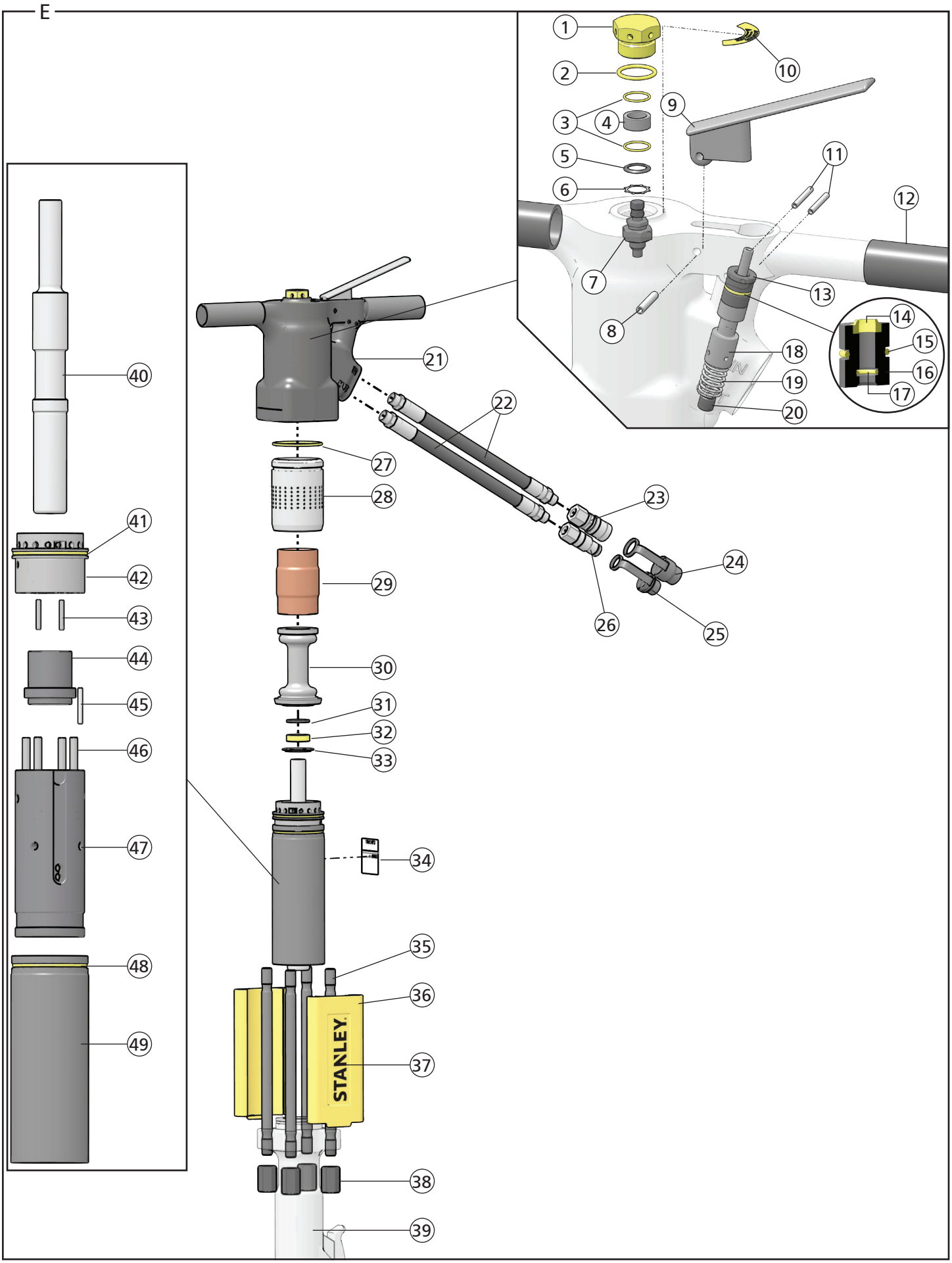
E
1
2
3
4
5
6
7
8
9
10
11
12
13
14
15
16
17
18
19
20
21
22
23
24
25
26
27
28
29
30
31
32
33
34
35
36
37
38
39
40
41
42
43
44
45
46
47
48
49
STANLEY

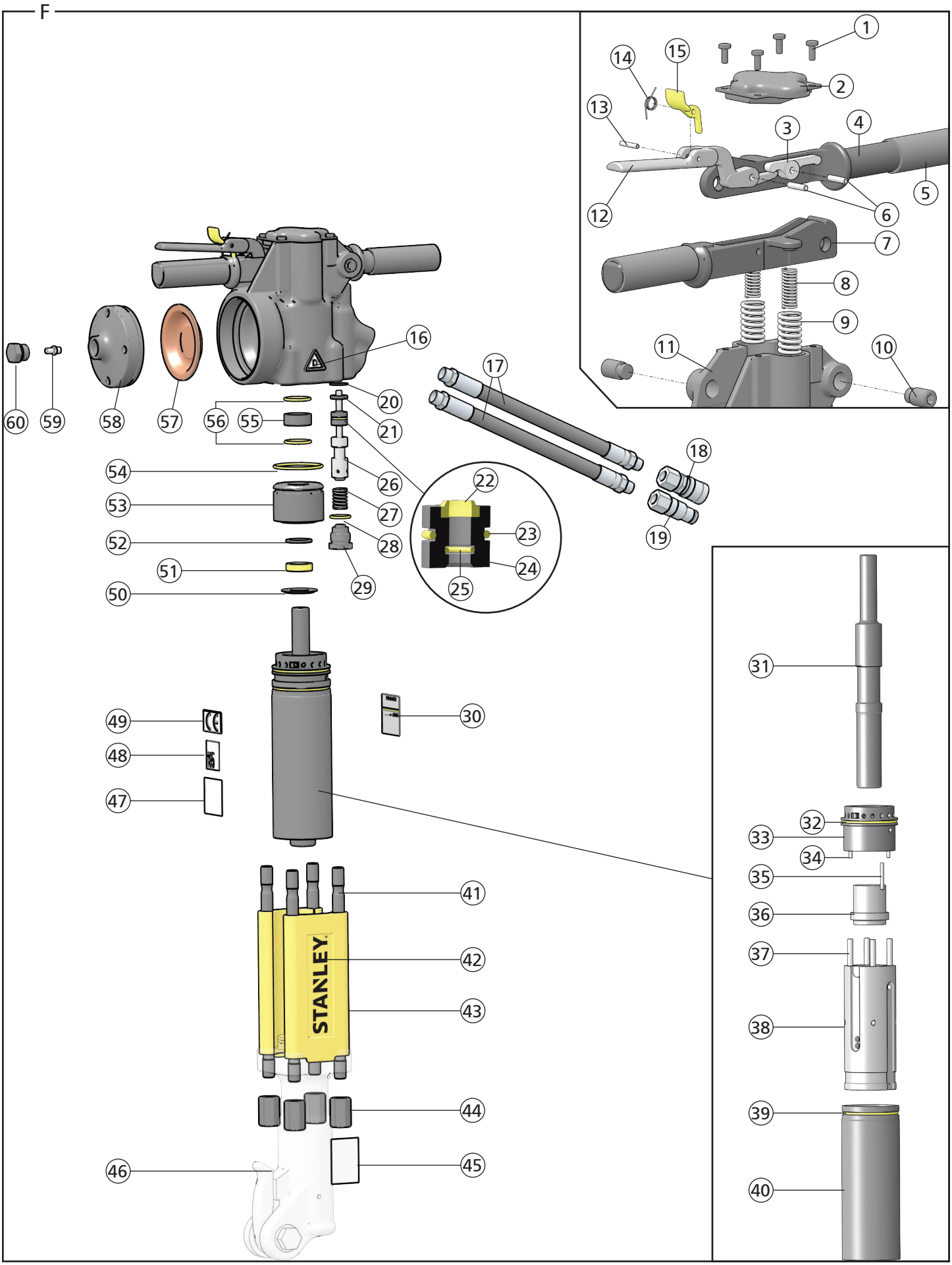
F
1
2
3
4
5
6
7
8
9
10
11
12
13
14
15
16
17
18
19
20
21
22
23
24
25
26
27
28
29
30
31
32
33
34
35
36
37
38
39
40
41
42
43
44
45
46
47
48
49
50
51
52
53
54
55
56
57
58
59
60
STANLEY

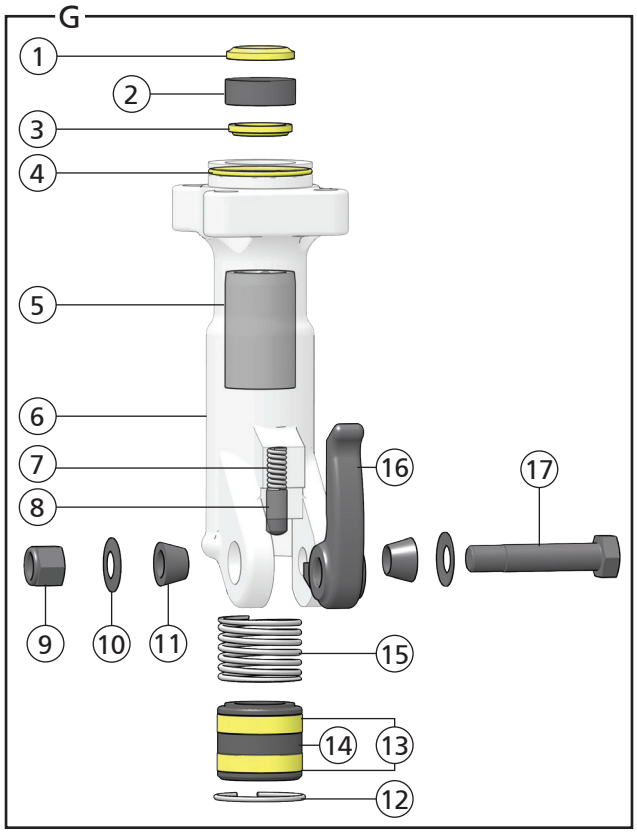
G
1
2
3
4
5
6
7
8
9
10
11
12
13
14
15
16
17

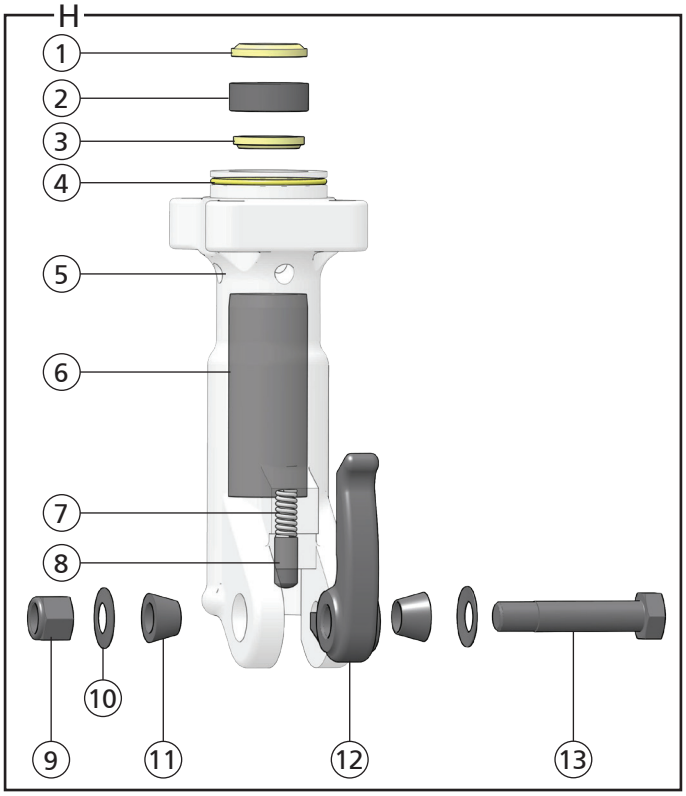
H
1
2
3
4
5
6
7
8
9
10
11
12
13

T-Handle Parts Illustration - Detail E		
ITEM	P/N	DESCRIPTION
1	06687	Valve Cap
2	04052	O-ring*
3	01772	O-ring
4	06684	Sintered Filter
5	22768	Seal Spacer
6	06688	Retaining Ring
7	04051	Charging Valve
8	00844	Roll Pin
9	04053	Trigger
10	10180	Gas Under Pressure Decal
11	22891	Roll Pin
12	02494	Handle Grip
13	04055	Washer
14	04056	Rod Wiper*
15	00293	O-ring*
16	04057	Bushing
17	01362	O-ring*
18	04077	Valve Spool
19	04058	Spring
20	04350	Orifice Plug
21	04049	Breaker Handle
22	01652	Hose
23	03972	Female Coupler
24	02324	Cap - Models BR67120D, BR6713016
25	03288	Cap - Models BR67120D, BR6713016
26	03973	Male Coupler
27	04054	O-ring*
28	04060	Accumulator Cylinder
29	04059	Accumulator Diaphragm
30	04061	Accumulator Chamber
31	04062	Backup Washer
32	04063	Rod Seal*
33	04064	Seal Retainer Washer
34	74667	Tool Name Tag
35	04071	Side Rod
36	73025	Snap-on Filler - Model BR67120
37	74832	STANLEY Logo Decal
38	04075	Side Rod Nut
39	Depends on Model	Breaker Foot (See Detail G & H)
40	04070	Piston
41	04054	O-ring*
42	04066	Automatic Valve Body
43	04571	Push Pin
44	04065	Automatic Valve
45	07890	Roll Pin
46	04067	Push Pin
47	04069	Flow Sleeve
48	04054	O-ring*

T-Handle Parts Illustration - Detail E		
ITEM	P/N	DESCRIPTION
49	04068	Flow Sleeve Tube
50	04596	Seal Kit (Not Shown) - * In Seal Kit

Anti Vibration Handle Parts Illustration - Detail F		
ITEM	P/N	DESCRIPTION
1	07628	Hex Head Cap Screw
2	26450	Top Plate
3	20511	Lever
4	28369	Handle
5	02494	Handle Grip
6	20500	Roll Pin
7	58529	Handle
8	20541	Spring
9	20498	Spring
10	20508	Pivot Screw
11	26596	Accumulator Valve Block
12	58526	Trigger - Models BR6717801A, BR6717801AA, BR6717802AA
	20502	Trigger - Models BR67125, BR67135, BR6713516,
13	07624	Roll Pin - Models BR6717801A, BR6717801AA, BR6717802AA
14	66828	Spring - Models BR6717801A, BR6717801AA, BR6717802AA
15	58527	Trigger Lock - Models BR6717801A, BR6717801AA, BR6717802AA
16	11207	Circuit Type "D" Decal
17	01652	Hose
18	03972	Female Coupler
19	03973	Male Coupler
20	24067	Retaining Ring
21	04055	Washer
22	04056	Rod Wiper*
23	00293	O-ring*
24	26451	Bushing
25	01362	O-ring*
26	20515	Valve Spool
27	04058	Spring
28	06891	O-ring*
29	31067	Spacer Plug
30	74668	Tool Name Tag
31	04070	Piston
32	04054	O-ring*
33	04066	Automatic Valve Body
34	04571	Push Pin
35	07890	Roll Pin
36	04065	Automatic Valve
37	04067	Push Pin
38	04069	Flow Sleeve
39	04054	O-ring*
40	04068	Flow Sleeve Tube
41	04071	Side Rod
42	74832	STANLEY Logo Decal
43	73025	Snap-on Filler
44	04075	Side Rod Nut

Anti Vibration Handle Parts Illustration - Detail F		
ITEM	P/N	DESCRIPTION
45	11208	Hex Shank Length Decal
46	Depends on Model	Breaker Foot (See Detail G & H)
47	28409	Composite Safety Sticker
48	66654	Sound Power Decal
49	28322	CE Decal
50	04064	Seal Retainer Washer
51	04063	Rod Seal*
52	04062	Backup Washer
53	26448	Spacer
54	16732	O-ring*
55	26452	Sintered Filter
56	04795	O-ring*
57	26574	Accumulator Diaphragm
58	26449	Accumulator Plug
59	20499	Charging Valve
60	07493	Plug
61	04596	Seal Kit (Not Shown) - * In Seal Kit

Breaker Foot Assembly - Detail G				
			MODEL	
ITEM	DESCRIPTION	QTY	BR6713015E, BR67130E	BR6717801A, BR6717801AA, BR6717802A
1	Cup Seal	1	34127	
2	Seal Insert	1	07524 (Must purchase entire foot assembly)	11236 (Must purchase entire foot assembly)
3	Rod Wiper*	1	04074	
4	O-ring*	1	04073	
5	Hex Bushing	1	07524 (Must purchase entire foot assembly)	11236 (Must purchase entire foot assembly)
6	Breaker Foot	1	07524 (Must purchase entire foot assembly)	11236 (Must purchase entire foot assembly)
7	Spring	1	01744	
8	Detent	1	08411	
9	Nut	1	04984	
10	Spring Washer	2	04985	
11	Taper Sleeve	2	01269	
12	Retaining Ring	1	07522	
13	Wear Ring	2	07516	
14	Collar Support	1	07520	12013
15	Spring	1	08158	
16	Latch	1	01837	
17	Foot Latch Bolt	1	04983	

Breaker Foot Assembly - Detail H					
			MODEL		
ITEM	DESCRIPTION	QTY	BR67120, BR67120D, BR67125	BR67130, BR6713016, BR67135, BR6713516	BR67320
1	Cup Seal	1	34127		
2	Seal Insert	1	05466 (Must purchase entire foot assembly)	05467 (Must purchase entire foot assembly)	08855 (Must purchase entire foot assembly)
3	Rod Wiper*	1	04074		
4	O-ring*	1	04073		
5	Breaker Foot	1	05466 (Must purchase entire foot assembly)	05467 (Must purchase entire foot assembly)	08855 (Must purchase entire foot assembly)
6	Hex Bushing	1	05466 (Must purchase entire foot assembly)	05467 (Must purchase entire foot assembly)	08855 (Must purchase entire foot assembly)
7	Spring	1	01744		
8	Detent	1	08411		
9	Nut	1	04984		
10	Spring Washer	2	04985		
11	Taper Sleeve	2	01269		
12	Latch	1	01837		
13	Foot Latch Bolt	1	04983		

Safety Precautions

⚠	The Safety Alert Symbol alerts you to potential personal injury hazards. Obey all safety messages that follow to avoid possible injury or death.
⚠ DANGER	Indicates an imminently hazardous situation which will result in death or serious injury.
⚠ WARNING	Indicates a potentially hazardous situation which could result in death or serious injury
CAUTION	Indicates a potentially hazardous situation which could result in property damage.

Always observe safety symbols. They are included for your safety and for the protection of the tool.

WARNING: Read all safety warnings and instructions. Failure to follow the warnings and instructions may result in tool damage and/or serious injury.

WARNING: To reduce the risk of injury, read the instruction manual.

General

- Do not discard safety instructions. Give to the operator.
- This tool will provide dependable service if operated in accordance with the instructions given in this manual. Read and understand this manual and any stickers and tags attached to the tool and hoses before operation. Failure to do so could result in personal injury or equipment damage.
- Inspect the tool before each use and ensure all decals are legible. Contact STANLEY if replacements are needed.
- Establish a training program for all operators to ensure safe operation. Do not operate the tool unless thoroughly trained or under the supervision of an instructor. Keep out of the reach of children.
- Operators and maintenance personnel shall be able to physically handle the bulk, weight and power of the tool.
- Avoid unsuitable postures as these positions do not allow for counteracting of normal or unexpected movement of the tool, such as a sudden break of the tool bit. Change postures during extended tasks to help avoid discomfort or fatigue.
- Never use the tool unless the inserted tool is retained with a proper retainer.
- Do not operate a damaged, improperly adjusted, modified or incompletely assembled tool.
- Use and maintain the tool as stated in this manual. Misuse of the tool can cause serious injury. Do not modify the tool in any way.
- Do not operate the tool in explosive atmospheres, such as in the presence of flammable liquids, gases or dust. Power tools create sparks which may ignite the dust or fumes.
- Provide adequate ventilation in closed areas when operating a gas or diesel hydraulic power source.
- Do not inspect, carry, clean, change accessories or perform maintenance on the tool while the power source is connected. Accidental engagement of the tool can cause serious injury.
- Ensure work piece is securely fixed. Be aware that failure of the work piece or accessories may generate high velocity projectiles.
- Never use the tool bit as a hand struck tool.
- Stay alert, watch what you are doing and use common sense when operating a hydraulic tool. Do not operate this tool if you are tired or under the influence of drugs or alcohol. A moment of inattention while operating hydraulic tools may result in serious injury.
- During operation, do not contact mechanisms, accessories or hardware as they can become very hot or sharp; use your Personal Protection Equipment (PPE).
- Supervising personnel should develop additional precautions relating to the specific work area and local safety regulations.
- Never operate the tool if you are unsure about the presence of underground utilities, such as electrical cables, gas pipes, etc. These can cause a hazard if damaged with the tool.
- The tool is not insulated against coming into contact with electric power. Use hose certified as non-conductive.
- Do not overreach. Maintain proper footing and balance at all times when using the tool.
- Slips, trips and falls are major causes of workplace injury. Be observant of hoses or oil surfaces lying about the work area, as they can be a tripping hazard.
- Operators must start in a work area without bystanders and must assess the risks to bystanders.
- Keep work area clean and well lit. Cluttered or dark areas invite accidents.
- Operators must be familiar with all prohibited work areas such as excessive slopes and dangerous terrain conditions.
- Only use clean hydraulic fluid, filling equipment and lubricants that have been recommended by STANLEY.
- Ensure tools are working properly and safely by performing preventative maintenance (PM) procedures.
- Repair and service of this tool must only be performed by an authorized and certified dealer.
- Do not force the tool to do the work of a larger tool. Use the correct tool for your application.
- Use only hoses and hose couplings that are rated for a minimum working pressure of 2500 PSI (172 BAR).
- In spite of the application of relevant safety regulations and the implementation of safety devices, certain residual risks cannot be avoided. These risks are: repetitive strain injury due to incorrect posture and risk of pinching fingers when changing tool bit.

Dust and Fumes

- **WARNING:** Some dust created by power sanding, sawing, grinding, drilling, and other construction activities contains chemicals known to the State of California to cause cancer, birth defects or other reproductive harm. Some examples of these chemicals are:
    - Lead from lead-based paints,
    - crystalline silica from bricks and cement and other masonry products, and
    - arsenic and chromium from chemically-treated lumber.

Your risk from these exposures varies, depending on how often you do this type of work. To reduce your exposure to these chemicals: work in a well ventilated area, and work with approved safety equipment, such as those dust masks that are specially designed to filter out microscopic particles. Protect yourself and those around you. Research and understand the materials you are grinding. Follow correct safety procedures and comply with all applicable national, state or provisional health and safety regulations relating to them, including, if appropriate arranging for the safe disposal of the materials by a qualified person.

- When dust or fumes are created, control them at the point of emission. Direct tool exhaust to minimize disturbance of dust.
- Operate and maintain the tool as recommended in this manual to minimize dust.
- Use respiratory protection in accordance with employers instruction or as required by occupational health and safety regulations.
- Avoid prolonged contact with dust. Allowing dust to get into your mouth, eyes or lay on the skin may promote absorption of harmful chemicals.

PPE

- Always wear safety equipment such as impact resistant goggles, ear protection, head protection, breathing protection and safety shoes at all times when operating the tool.
- Hands may be exposed to hazards, impacts, cuts, abrasions and heat. Wear gloves.
- Wear a hardhat if performing overhead work.
- Use PPE that conforms to standards ANSI Z87.1 (Eye and Face Protection), ANSI Z89.1 (Head Protection), ANSI Z41.1 (Foot Protection) and ANSI S12.6 (S3.19) (Hearing Protection).
- Do not wear loose fitting clothing or jewelry when operating the tool.

M003
Wear Ear Protection

M004
Wear Eye Protection

M016
Wear a Mask

Sound

- Exposure to high noise levels can cause permanent, disabling hearing

loss and other problems, such as tinnitus (ringing, buzzing, whistling or humming in the ears). Use hearing protection in accordance with employer's instructions and as required by occupational health and safety regulations.
- Use and maintain as recommended in the manual to prevent an unnecessary increase in noise levels.

Vibration

- When using a non-rotary percussive tool to perform work related activities, the operator can experience discomfort in the hands, arms, shoulders, neck or other parts of the body.
- If you experience numbness, tingling, pain or whitening of the skin in your fingers or hands, stop using the tool. Tell your employer and consult a physician.
- Wear warm clothing when working in cold conditions and keep your hands warm and dry.
- Exposure to vibration can cause disabling damage to the nerves and blood supply of the hands and arms.
- Use and maintain as recommended in the manual to prevent an unnecessary increase in vibration.
- Check for vibration level before each service. If you feel a higher than normal vibration, contact your STANLEY dealer for repair.

Hydraulic

- **Warning:** Hydraulic fluid under pressure could cause skin injection injury. Do not check for leaks with your hands. If you are injured by hydraulic fluid, get medical attention immediately.
- Do not let hydraulic oil get on the skin. Hydraulic oil is hot. Wear Personal Protection Equipment (PPE) at all times.
- If exposed to hydraulic fluid, wash hands immediately.
- Do not exceed the maximum relief valve setting stated on the tool.
- Inspect and clean couplers before use, daily. Replace damaged couplers immediately.
- Hydraulic circuit control valve must be OFF before coupling or uncoupling tools. Failure to do so may damage the couplers and cause overheating of the hydraulic system.
- Ensure the couplers are properly connected and are tight.
- Do not operate the tool at fluid temperatures above 140°F (60°C). Higher temperatures can cause operator discomfort and damage to the tool.
- Do not exceed the rated flow and pressure as stated on the tool. Rapid failure of the internal seals may result.

What is the BR67 Hydraulic Breaker?

BR67 is a hydraulic breaker for use in the 70-90 lbs. weight class. It is highly productive in utility construction, street maintenance, repair of water and gas mains, and general contracting jobs. BR67 requires an external hydraulic power source capable of supplying 7-9 GPM.

Specifications	
Pressure	1500-2500 PSI (103-172 BAR)
Flow	7-9 GPM (26-34 LPM)
Max. Pressure	2500 PSI (172 BAR)
Max. Relief Pressure	2150 PSI (148 BAR)
Recommended Back Pressure	250 PSI (17 BAR) or less - Can be used with higher back pressures with reduced seal life.
Couplers	3/8 Inch Male Pipe Hose Ends
Port Size	-8 SAE O-ring
Tool Weight	T-Handle: 67 Lbs (30 Kg) Anti-Vibration: 75 Lbs (34 Kg)
Tool Length	T-Handle: 29 Inches (74 cm) Anti-Vibration: 27 Inches (69 cm)
Width (at handles)	T-Handle: 16 Inches (41 cm) Anti-Vibration: 18 Inches (46 cm)
Max. Hydraulic Oil Temp.	140°F (60°C)
HTMA/EHTMA Category	Type II, Category D

Sound & Vibration Declaration	
Measured A-Weighted sound power level	103 dBA
Uncertainty	1.7 dBA
Measured A-Weighted Sound Pressure	99 dBA
Uncertainty	3 dBA
Values determined according to noise test code given in ISO 15744, using the basic standard ISO3744. Test conducted by independent notified body to comply with 2000/14/EC:2005.	
Measured Vibration Emission Value: 3-Axis (Trigger Handle)	7.7 m/sec²
Measured Vibration Emission Value: 3-Axis (Non-Trigger Handle)	7.2 m/sec²
Uncertainty	1.46 m/sec²

Parts of a BR67 - Detail A

1	Accumulator Valve Cap
2	Trigger
3	Handle
4	Hydraulic Supply Ports
5	Accumulator
6	STANLEY Logo Decal
7	Breaker Foot
8	Breaker Foot Latch
9	Trigger
10	Trigger Lock
11	Accumulator
12	Handle
13	Hydraulic Supply Ports
14	Type "D" Decal (CE Models)
15	STANLEY Logo Decal
16	Hex Shank Length Decal
17	Breaker Foot
18	Breaker Foot Latch
19	Composite Safety Decal
20	Sound Power Level Decal
21	CE Decal
22	Accumulator Valve Cap

Tool Setup - Detail B

⚠WARNING

Do not install or change tool accessories while the hydraulic power source is connected. Accidental engagement of the tool can cause serious injury. Disconnect the hydraulic power source before installing or changing accessories.

1. Disconnect the tool from the hydraulic power source.

Install the Breaker Bit

⚠WARNING

The tool bit can get extremely hot during operation. Always wear gloves when installing bits. Hot bits can cause burns.

2. Unlock the breaker foot latch.
3. Insert the tool bit and lock the latch. Never use BR67 unless the tool bit is locked in the retainer.

Note: Never use a blunt tool bit as they cause more vibration.

Connect to a Hydraulic Power Source

4. Using a calibrated flow and pressure gauge, check the output of the hydraulic power source. Ensure it matches the flow and pressure in "Specifications" on page 11. Hydraulic fluid must be 50°F or above. Preheat if necessary.
5. Ensure that the hydraulic power source is equipped with a relief valve set to open at the maximum relief pressure. See "Specifications" on page 11.
6. Wipe hose couplers with a clean, lint free cloth.
7. Connect the return hose to the tool port marked "Out".
8. Connect the pressure hose to the tool port marked "In".
9. Ensure couplers are undamaged, properly connected and are tight.
10. Power up the hydraulic power source.

Tool Operation - Detail C

CAUTION

Always hold tool with both hands to maximize control. Apply proper down pressure and maintain proper footing at all times.

1. Wrap your hands around the handles. Stand in back of the tool, using your leg against the snap-on filler for stability.

Note: Hold the tool correctly and be ready to counteract normal or sudden movements. Have both hands available.

2. Place the breaker bit on the material to be broken, at a 90° angle. Apply down pressure.
3. Flip the trigger lock (CE models only).
4. Slowly squeeze the trigger to start breaking. Squeeze harder for fast speed operation.
5. When starting, break until the tool bit breaks through, then reposition the bit. Do not use the tool bit as a lever to move material.

Note: Never cool a hot tool bit in water. Tools can become brittle and fail.

6. Continue breaking around the original hole, in 2 inch sized bites.
7. Release Trigger to stop the tool.

Note: If you encounter a breakdown or the tool stops for any reason, release the trigger and power down the hydraulic power source.

Tool Maintenance

WARNING

Do not perform maintenance on the tool while the hydraulic power source is connected. Accidental engagement of the tool can cause serious injury. Disconnect the hydraulic power source before servicing.

Daily Maintenance

1. Remove hydraulic power from the tool and check all hydraulic connections and hoses for damage. Replace damaged parts before operating the tool.
2. Inspect the tool bit latch and associated parts. Replace when they have become worn, cracked or distorted.
3. Inspect tool to ensure all stickers are legible. Contact STANLEY if replacements are needed.
4. Check the flow and pressure of the hydraulic power source using a calibrated flow meter. Proper flow and pressure maintain proper tool speed. If tool speed increases or decreases, stop using the tool and ensure proper flow and pressure.

Check/Charge the Accumulator - Detail D

Check accumulator charge every 6 months or if poor performance develops.

Required Tools:

- STANLEY Accumulator Charge Kit (P/N 31254)
- Nitrogen Bottle

Check

1. Remove the charging plug from the breaker handle.
2. (a) Hold the chuck end of the tester and (b) twist the gauge counter-clockwise. This will retract the valve stem.
3. Screw the tester onto the breaker charging port.
4. Twist the tester gauge clockwise and read the pressure indicated on the gauge. Charge should be 500-700 PSI (34-48 BAR).

Charge

5. Retract the tester valve stem.
6. Connect the charging assembly hose to the tester.
7. Twist the tester gauge clockwise to advance the valve stem.
8. Slowly open the snub valve and charge to 600 PSI (42 BAR).
9. Close the snub valve, retract the tester valve stem and remove the tester from the breaker charging port. Replace the charging plug.

Tool Storage & Transport

Storage

Plug open hydraulic ports. Clean the tool and store in a clean, dry space that is safe from damage.

Transport

Secure the tool to the transport vehicle. Lift only as high as necessary to load. NEVER lift or transport over people. Ensure tool is secured and will not move during transport. An unsecured tool could cause personal injury or damage to the tool.

Tool Disposal

Hydraulic Oil

Hydraulic oil can contaminate the air, ground and water if not properly recycled. Recycle hydraulic oil in accordance with all State, Federal and local laws, at your local oil recycling facility.

Hydraulic Hoses

Hang hydraulic hoses to drain. Collect the oil for recycling. Contact your local municipal recycling authorities for an approved hydraulic hose recycling site.

Tool Body

Drain hydraulic oil from the tool, making sure to collect the oil for recycling. Discharge the accumulator, disassemble the tool and dispose of all non-metal parts. Recycle the metal components. Contact your local municipal recycling authorities for recycling instructions.

Accessories

Description	Part Number
1 1/8 Inch Hex x 6 inch Shank	
Moil Point, 14 Inch Long, UC	02333
Chisel Point, 14 Inch Long, UC	03990
3 Inch Chisel, 14 Inch Long, UC	02334
Clay Spade, 5 1/2 Inch Blade	02331
Asphalt Wedge, 12 Inch	08106
Asphalt Cutter, 5 Inch Wide	02332
Ground Rod Driver, 1 Inch Rod	04176
1 1/4 Inch Hex x 6 Inch Shank	
Moil Point, 14 Inch Long, UC	02336
3 Inch Chisel, 14 Inch Long, UC	02337
Clay Spade, 5 1/2 Inch Blade	09262
Asphalt Cutter, 5 Inch Wide	02335
Ground Rod Driver, 1 Inch Rod	04367
Heavy Duty Chisel, 1 Inch	02338
Heavy Duty Moil Point, 18 Inch	04404
Clay Spade, 8 Inch	04405
Detachable Shank (Requires 17783)	17782
Tamping Pad, 6 Inch (Requires 17782)	17783

Troubleshooting

Problem	Possible Cause	Solution
Tool does not run or runs improperly.	The hydraulic power source is not running or not running properly.	Ensure the power source delivers proper flow and pressure. See "Specifications" on page 11. Proper flow and pressure maintain proper tool speed. Check regularly.
	Couplers or hoses are blocked.	Turn off and disconnect the tool from hydraulic power source. Ensure no blockage exists.
	Low accumulator charge.	Check and recharge accumulator. See "Check/Charge the Accumulator - Detail D" on page 12.
	Hydraulic fluid too hot.	Provide a cooler to maintain temperature. See "Specifications" on page 11.
	High back pressure.	Check the hydraulic system for excessive back pressure.
	Mechanical failure of piston or automatic valve.	Contact your STANLEY dealer for service.
Fluid leakage on tool bit.	Lower piston seal failure.	Contact your STANLEY dealer for service.
Fluid leakage around the tool trigger.	Valve spool failure.	Contact your STANLEY dealer for service.

STANLEY®

STANLEY Infrastructure
6430 SE Lake Road, Portland, Oregon 97222 USA
(503) 659-5660 / Fax (503) 652-1780
www.stanleyinfrastructure.com

© 2014 Stanley Black&Decker, Inc.
New Britain, CT 06053 USA