STANLEY®

OPERATOR'S MANUAL

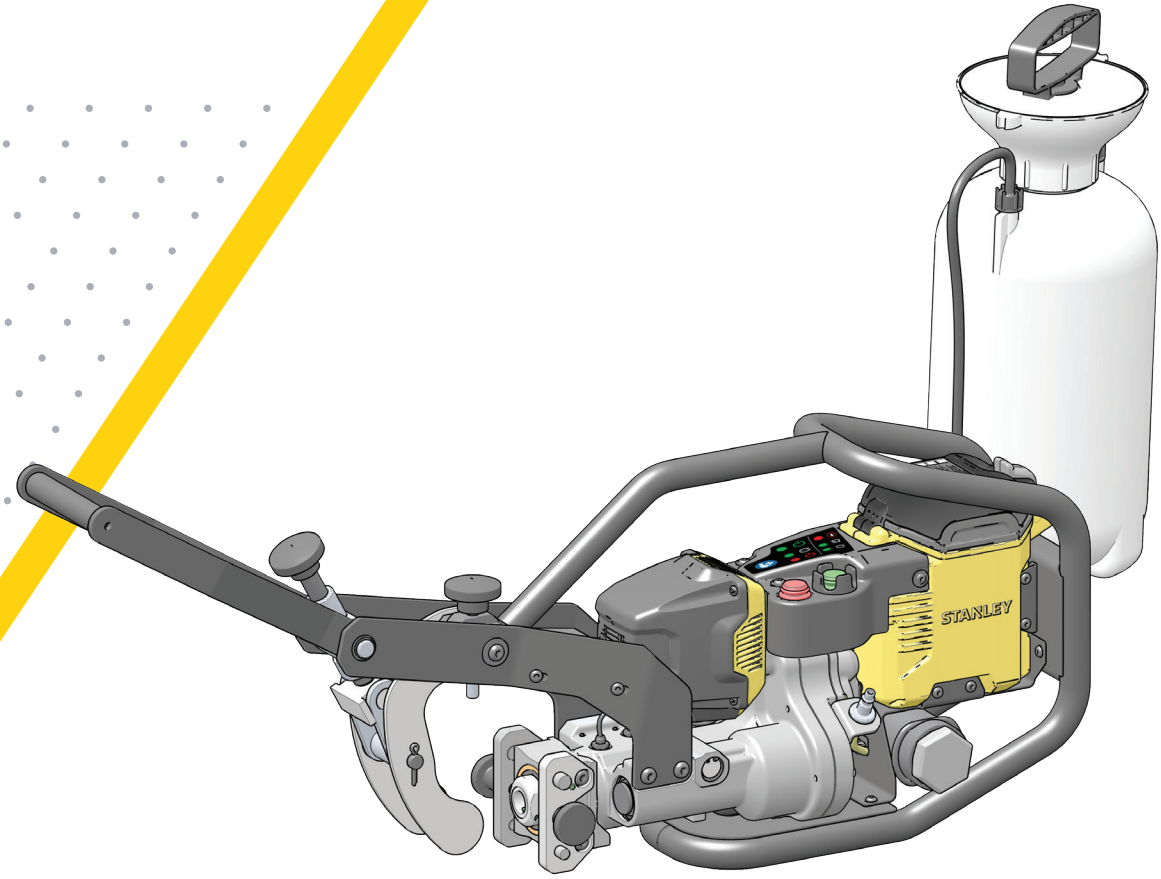

CORDLESS RAIL DRILL

RD60

MADE IN U.S.A. WITH GLOBAL MATERIALS™

Manual Number: 62211
Date: March 2022
Rev. 5

503-659-5600 | www.stanleyinfrastructure.com | 6430 SE Lake Road, Portland, OR. 97222, United States of America | Copyright ©2021

Table of Contents

PREFACE 5

SAFETY STATEMENTS 6

GENERAL SAFETY PRECAUTIONS 6

DECALS 16
- General Information 16

NOMENCLATURE 18

INSTALLATION 19
- General Information 19
- Charge Battery 19
- Store Drill Bit for Transportation to Jobsite 20

OPERATION 21
- Intended Use 21
- Install Rail Template 21
- Install Drill Bit 22
- Prepare Coolant Canister 22
- Attach the Rail Clamp to the Rail 23
- Connect and Pressurize the Coolant Canister 23
- Insert the Battery 24
- Starting the Tool Cycle 26
- Removing the Drill Bit 27
- Recharge the Battery 27
- Storage 28
- Removal From Storage 28
- Transporting 28

MAINTENANCE 30

TROUBLESHOOTING 31

TOOL DISPOSAL 32

SPECIFICATIONS 33

ACCESSORIES 34
- Rail Templates / Rail Guides 34
- Consumables 39
- Batteries, Chargers & Other Accessories 39

WARRANTY 39

THIS PAGE
IS INTENTIONALLY
BLANK

Preface

General Comments

Congratulations on the purchase of your new product! This product was carefully designed and manufactured to give you many years of dependable service. Only minor maintenance (such as cleaning and lubricating) is required to keep it in top working condition. Be sure to observe all maintenance procedures and safety precautions in this manual and on any safety decals located on the product and on any equipment on which the product is used with.

This manual has been designed to help you do a better, safer job. Read this manual carefully and become familiar with it's contents.

⚠ WARNING!

Never let anyone operate this unit without reading the "Safety Precautions" and "Operating Instructions" sections of this manual.

Unless noted otherwise, right and left sides are determined from the operator's control position when facing forward.

IMPORTANT

The illustrations and data used in this manual were current (according to the information available to us) at the time of printing, however, we reserve the right to redesign and change the product as may be necessary without notification.

Before Operation

The primary responsibility for safety with this equipment falls to the operator. Make sure the equipment is operated only by trained individuals that have read and understand this manual. If there is any portion of this manual or function you do not understand, contact your local authorized dealer or the manufacturer to obtain further assistance. Keep this manual available for reference. Provide the manual to any new owners and/or operators.

Safety Alert Symbol

This is the "Safety Alert Symbol" used by this industry. This symbol is used to warn of possible injury. Be sure to read all warnings carefully. They are included for your safety and for the safety of others working with you.

Service

Use only manufacturer replacement parts. Substitute parts may not meet the required standards.

Record the model and serial number of your unit on the cover of this manual. The parts department needs this information to insure that you receive the correct parts.

Safety Statements

THIS SYMBOL BY ITSELF OR WITH A WARNING WORD THROUGHOUT THIS MANUAL IS USED TO CALL YOUR ATTENTION TO INSTRUCTIONS INVOLVING YOUR PERSONAL SAFETY OR THE SAFETY OF OTHERS. FAILURE TO FOLLOW THESE INSTRUCTIONS CAN RESULT IN INJURY OR DEATH.

DANGER! INDICATES A HAZARDOUS SITUATION WHICH, IF NOT AVOIDED, WILL RESULT IN DEATH OR SERIOUS INJURY

WARNING! INDICATES A HAZARDOUS SITUATION WHICH, IF NOT AVOIDED, COULD RESULT IN DEATH OR SERIOUS INJURY

CAUTION! INDICATES A HAZARDOUS SITUATION WHICH, IF NOT AVOIDED, COULD RESULT IN MINOR OR MODERATE INJURY

NOTICE NOTICE IS USED TO ADDRESS PRACTICES NOT RELATED TO PHYSICAL INJURY.

General Safety Precautions

WARNING!

READ AND UNDERSTAND MANUAL

- Read and understand this manual and other safety information provided with this equipment. Be sure all controls and instructions are understood before attempting to install, operate or maintain this equipment.
- Read and follow all safety warnings and instructions.
- Do not discard safety instructions. Give to the operator.
- Improper installation, operation or maintenance of this equipment could result in serious injury, death or property damage.

READ AND UNDERSTAND ALL SAFETY STATEMENTS

- Read all safety statements in this manual and on your equipment safety decals.
- Keep safety decals in good condition. Replace missing or damaged safety decals.
- Because the manufacturer cannot foresee all hazardous circumstances, the precautions listed in this manual and on the equipment are not all-inclusive. If a procedure, method, tool or part is not specifically recommended by the manufacturer, determine whether it is safe for you and others, and that the equipment will not be damaged or made unsafe as a result of your decision to implement it.

PERSONAL PROTECTIVE EQUIPMENT (PPE)

- **Always wear personal protective equipment (PPE) appropriate for the job, such as eye protection, ear protection, gloves, head protection, breathing protection and safety shoes. PPE should be worn at all times when operating, maintaining or observing the tool.**
- **Use PPE that conforms to standards ANSI Z87.1 (Eye and Face Protection), ANSI Z89.1 (Head Protection), ANSI Z41.1 (Foot Protection) and ANSI S12.6 (S3.19) (Hearing Protection).**

M003
Wear Ear Protection

M004
Wear Eye Protection

M016
Wear a Mask

- **Do not wear loose fitting clothing, jewelry, long hair or gloves with cut or frayed fingers. These items can become entangled in the equipment causing hazards such as choking, scalping, lacerations, severed or broken appendages.**

KNOW YOUR EQUIPMENT

- **Know your equipment's capabilities, dimensions and controls before operating.**
- **Do not operate a damaged, improperly adjusted, modified or incompletely assembled tool.**
- **Make sure all safety guards and devices are installed.**
- **Check all hardware to ensure it is tight.**
- **Make certain that all locking pins, latches and connection devices are properly installed and secured.**
- **Remove and replace any damaged, fatigued, or excessively worn parts.**
- **Inspect the tool before each use and ensure all safety decals are in place and legible. Contact manufacturer if replacement decals are needed.**
- **Know and follow good work practices when assembling, maintaining, repairing, mounting, removing or operating this equipment.**

PROTECT AGAINST FLYING DEBRIS

- **Always wear proper safety glasses, goggles or a face shield when driving pins in or out, or when any operation causes dust, flying debris or any other hazardous material.**

SAFELY OPERATE EQUIPMENT

- **Establish a training program for all operators to ensure safe operation.**
- **Do not operate the tool or attachment unless thoroughly trained or under the supervision of a qualified operator or instructor.**
- **Know and obey all OSHA regulations, local laws, and other professional guidelines for your operation.**
- **Know your work site safety rules. When in doubt on any safety issue, contact your supervisor or safety coordinator.**
- **Assess risks to yourself and others around you before operating the tool. Start in a work area without bystanders and assess the risks to bystanders including, but not limited to, the risk of serious injury or death caused by the tool or accessories dropped from an elevated height.**
- **Do not operate the equipment from anywhere other than the correct operator's position.**

General Safety Precautions

- Do not alter or remove any safety feature from the prime mover or tool.
- Stay alert, watch what you are doing and use common sense when operating the tool. Do not operate the tool if you are tired or under the influence of drugs, alcohol or medication. A moment of inattention while operating the tool may result in serious injury.

CALIFORNIA PROPOSITION 65 WARNING

- This product may contain a chemical known to the State of California to cause cancer, or birth defects or other reproductive harm. www.P65Warnings.ca.gov

DUST AND FUMES

- WARNING: Dust created by power sanding, sawing, grinding, drilling, and other job site activities may contain chemicals known to the State of California to cause cancer, birth defects or other reproductive harm. Some examples of these chemicals are:
  - Lead from lead-based paints
  - Crystalline silica from bricks, cement and other masonry products
  - Arsenic and chromium from chemically-treated lumber

- To reduce your exposure to these chemicals: work in a well ventilated area and work with approved safety equipment, such as dust masks that are specially designed to filter out microscopic particles. Protect yourself and those around you.
- Research and understand materials you are working with.
- Follow correct safety procedures and comply with all applicable national, state or provisional health and safety regulations relating to them, including, if appropriate, arranging for the safe disposal of the materials by a qualified person.
- Use dust suppression or dust collection methods when using a tool that may cause high levels of dust.
  - Control dust or fumes at the point of emission.
  - Direct tool exhaust to minimize disturbance of dust.
  - Operate and maintain the tool as recommended in this manual to minimize dust.
  - Use respiratory protection in accordance with employers instruction or as required by occupational health and safety regulations.
  - Avoid prolonged contact with dust. Allowing dust to get into your mouth, eyes or on the skin may promote absorption of harmful chemicals.

SAFELY MAINTAIN AND REPAIR EQUIPMENT

- Keep the work area well lit.
- Work on a level surface.
- Use properly grounded electrical outlets and tools.
- Use the correct tools for the job at hand.
- Ensure tools are working properly and safely by performing preventative maintenance procedures.

- **Wear protective equipment specified by the tool manufacturer.**
- **Do not perform any work on the tool unless you are authorized and qualified to do so. Always read the operator service manuals before any repair is made. After completing maintenance or repair, check for correct functioning of the tool. If not functioning properly, shut down the machine, follow proper Lock-Out / Tag-Out procedures and tag "DO NOT OPERATE" until all problems are corrected.**

DO NOT MISUSE OR MODIFY EQUIPMENT

- **Use and maintain the tool as stated in this manual. Misuse of the tool can cause serious injury.**
- **Do not modify the tool in any way. Modifications may weaken it's integrity and may impair it's function, safety, life and performance. When making repairs use only factory recommended replacement parts, following authorized instructions. Use of parts that are not factory approved may be substandard in fit and quality, and may cause damage and void the warranty.**

END OF LIFE DISPOSAL

- **At the completion of the useful life of the unit, drain all fluids and dismantle by separating the different materials (rubber, steel, plastic, etc.). Follow all federal, state and local regulations for recycling and disposal of the fluid and components.**

Equipment Safety Precautions

⚠ WARNING!

READ THE RAIL DRILL MANUAL

- ***WARNING:*** Read all safety warnings and instructions. Failure to follow warnings and instructions may result in tool damage and/or serious injury.

- Always observe safety symbols. They are included for your safety and for the protection of the tool.
- ***WARNING:*** To reduce the risk of injury, read the instruction manual.
- This tool will provide dependable service if operated in accordance with the instructions given in this manual. Read and understand this manual and any stickers and tags attached to the tool and hoses before operation. Failure to do so could result in personal injury or equipment damage.

REQUIREMENTS FOR OPERATORS

- Establish a training program for all operators to ensure safe operation. Do not operate the tool unless thoroughly trained or under the supervision of an instructor. Keep out of the reach of children.
- Operators and maintenance personnel shall be able to physically handle the bulk, weight and power of the tool.
- Avoid unsuitable postures as these positions do not allow for counteracting of normal or unexpected movement of the tool, such as a sudden break of the tool bit. Change postures during extended tasks to help avoid discomfort or fatigue.
- Supervising personnel should develop additional precautions relating to the specific work area and local safety regulations.
- Operators must be familiar with all prohibited work areas such as excessive slopes and dangerous terrain conditions.

OPERATION

- Do not operate the tool in explosive atmospheres, such as in the presence of flammable liquids, gases or dust. Power tools create sparks which may ignite the dust or fumes.
- Do not inspect, carry, clean, change accessories or perform maintenance on the tool while the battery is connected. Accidental engagement of the tool can cause serious injury.
- Ensure work piece is securely fixed. Be aware that failure of the work piece or accessories may generate high velocity projectiles.
- During operation, do not contact mechanisms, accessories or hardware as they can become very hot; use your Personal Protection Equipment (PPE).
- The tool is not insulated against coming into contact with electric power.
- Do not overreach. Maintain proper footing and balance at all times when using the tool.
- Slips, trips and falls are major causes of workplace injury. Be observant of hoses lying about the work area, as they can be a tripping hazard.
- Only use clean fluids and lubricants that have been recommended by STANLEY.

- **Repair and service of this tool must only be performed by an authorized DEWALT service center.**
- **Do not force the tool to do the work of a larger tool. Use the correct tool for your application.**
- **Keep hands away from rotating chuck, drill bits or drives.**
- **Rotating drive sockets and drive extensions can easily entangle rubber-coated gloves or metal reinforced gloves. Never hold the drive, sockets, drive extensions or other accessories.**
- **Do not use in confined spaces. Beware of crushing hazards between the tool and the workpiece, especially when unscrewing or reversing the tool.**
- **Prevent unintentional starting. Ensure the trigger is in the off position before connecting to power source, picking up or carrying the tool. Carrying power tools with your finger on the trigger or energizing power tools that have the trigger on invites accidents.**
- **In spite of the application of relevant safety regulations and the implementation of safety devices, certain residual risks cannot be avoided. These risks are: repetitive strain injury due to incorrect posture and risk of pinching fingers when changing tool bit or batteries.**
- **Select and replace tool bits as recommended in order to prevent an unnecessary increase in dust or fumes.**
- **Keep tool handles dry, clean and free from oil and grease. This will enable better control of the tool.**

PERSONAL PROTECTIVE EQUIPMENT (PPE)

- **Hands may be exposed to hazards, impacts, cuts, abrasions and heat. Wear gloves.**
- **Wear a hardhat if performing overhead work.**
- **Do not wear loose fitting clothing, jewelry or gloves with cut or frayed fingers when operating the tool. Entanglement, choking, scalping and laceration can occur if loose clothing, personal jewelry, neck wear, hair or gloves are not kept away from the rotating tool and it's accessories. Gloves can become entangled with the rotation drive, causing severed or broken fingers.**

SOUND

- **Exposure to high noise levels can cause permanent, disabling hearing loss and other problems, such as tinnitus (ringing, buzzing, whistling or humming in the ears). Use hearing protection in accordance with employer's instructions and as required by occupational health and safety regulations. Appropriate controls to reduce the risk can include actions such as damping materials to prevent work pieces from "ringing".**
- **Use and maintain tool as recommended in the manual to prevent an unnecessary increase in noise levels.**

VIBRATION

- **When using a rotary or percussive tool to perform work related activities, the operator can experience discomfort in the hands, arms, shoulders, neck or other parts of the body.**
- **If you experience numbness, tingling, pain or whitening of the skin in your fingers or**

hands, stop using the tool. Tell your employer and consult a physician.

- Wear warm clothing when working in cold conditions and keep your hands warm and dry.
- Exposure to vibration can cause disabling damage to the nerves and blood supply of the hands and arms.
- Do not use worn or ill-fitting sockets or extensions, as this is likely to cause a substantial increase in vibration.
- Do not touch sockets or accessories during impacting. This increases the risk of cuts, burns or vibration injuries.
- Use and maintain tool as recommended in the manual to prevent an unnecessary increase in vibration.
- Check the vibration level after each service. If higher than normal, contact your STANLEY dealer.

BATTERY AND CHARGER

- Do not inspect, carry, clean, change accessories or perform maintenance on the tool while the battery is connected. Accidental engagement of the tool can cause serious injury.
- ***WARNING:*** Read all safety warnings and instructions for the battery pack, charger and power tool. Failure to follow the warnings and instructions may result in electric shock, fire and/or serious injury.
- Do not charge or use the battery pack in explosive atmospheres, such as in the presence of flammable liquids, gases or dust. Inserting or removing the battery pack from the charger may ignite the dust or fumes.
- Never force the battery pack into the charger. Do not modify the battery pack in any way to fit into a non-compatible charger as battery pack may rupture causing serious personal injury.
- Charge the battery packs only in designated DEWALT chargers.
- Do not splash or immerse in water or other liquids.
- Do not store or use the tool and battery pack in locations where the temperature may reach or exceed 104°F (40°C) (such as outside sheds or metal buildings in summer). For best life, store battery packs in a cool, dry location.
- Do not store the battery packs in a tool with the trigger switch locked on. Never tape the trigger switch in the ON position.
- Do not incinerate the battery pack even if it is severely damaged or is completely worn out. The battery pack can explode in a fire. Toxic fumes and materials are created when lithium-ion battery packs are burned.
- If battery contents come into contact with the skin, immediately wash area with mild soap and water. If battery liquid gets into the eye, rinse water over the open eye for 15 minutes or until irritation ceases. If medical attention is needed, the battery electrolyte is composed of a mixture of liquid organic carbonates and lithium salts.
- Contents of opened battery cells may cause respiratory irritation. Provide fresh air. If symptoms persist, seek medical attention.
- ***WARNING:*** Burn hazard. Battery liquid may be flammable if exposed to spark or flame.

- ***WARNING:*** **Fire hazard. Never attempt to open the battery pack for any reason. If the battery pack case is cracked or damaged, do not insert into the charger. Do not crush, drop or damage the battery pack. Do not use a battery pack or charger that has received a sharp blow, been dropped, run over or damaged in any way (e.g., pierced with a nail, hit with a hammer, stepped on). Damaged battery packs should be returned to the service center for recycling.**
- ***WARNING:*** **Fire hazard. Do not store or carry the battery pack so that metal objects can contact exposed battery terminals. For example, do not place the battery pack in aprons, pockets, tool boxes, product kit boxes, drawers, etc., with loose nails, screws, keys, etc. Transporting batteries can possibly cause fires if the battery terminals inadvertently come in contact with conductive materials such as keys, coins, hand tools, and the like. The US Department of Transportation Hazardous Material Regulations (HMR) actually prohibit transporting batteries in commerce or on airplanes in carry-on baggage UNLESS they are properly protected from short circuits. So when transporting individual battery packs, make sure that the battery terminals are protected and well insulated from materials that could contact them and cause a short circuit.**
- ***WARNING:*** **Read all safety warnings and all instructions for the battery pack, charger and power tool. Failure to follow the warnings and instructions may result in electric shock, fire and/or serious injury.**
- **Do not attempt to charge the battery pack with any chargers other than the ones in this manual. The charger and battery pack are specifically designed to work together.**
- **These chargers are not intended for any users other than charging DEWALT rechargeable batteries. Any other uses may result in risk of fire, electric shock or electrocution.**
- **Do not expose the charger to rain or snow.**
- **Pull by the plug rather than the cord when disconnecting the charger. This will reduce the risk of damage to the electric plug and cord.**
- **Make sure that the cord is located so that it will not be stepped on, tripped over or otherwise subjected to damaged or stress.**
- **Do not use an extension cord unless it is absolutely necessary. Use of improper extension cord could result in risk of fire, electric shock or electrocution.**
- **When operating a charger outdoors, always provide a dry location and use an extension cord suitable for outdoor use. Use of a cord suitable for outdoor use reduces the risk of electric shock.**
- **An extension cord must have adequate wire size (AWG or American Wire Gauge) for safety. The smaller the gauge number of the wire, the greater the capacity of the cable, that is, 16 gauge has more capacity than 18 gauge. An undersized cord will cause a drop in line voltage resulting in loss of power and overheating. When using more than one extension to make up the total length, be sure each individual extension contains at least the minimum wire size. The following table shows the correct size to use depending on cord length and nameplate ampere rating. If in doubt, use the next heavier gauge. The lower the gauge number, the heavier the cord.**

Equipment Safety Precautions

Volts		Total Length of Cord in Feet (Meters)			
120 V		25 (7.6)	50 (15.2)	100 (30.5)	150 (45.7)
240 V		50 (15.2)	100 (30.5)	200 (61.0)	300 (91.4)
Ampere Rating		American Wire Gauge			
More Than	Not More Than				
0	6	18	16	16	14
6	10	18	16	14	12
10	12	16	16	14	12
12	16	14	12	Not Recommended	

- **Do not place any object on top of the charger or place the charger on a soft surface that might block the ventilation slots and result in excessive internal heat. Place the charger in a position away from any heat source. The charger is ventilated through slots in the top and the bottom of the housing.**
- **Do not operate the charger with a damaged cord or plug.**
- **Do not operate the charger if it has received a sharp blow, been dropped or otherwise damaged in any way. Take it to an authorized service center.**
- **Do not disassemble the charger; take it to an authorized service center when service or repair is required. Incorrect reassembly may result in a risk of electric shock, electrocution or fire.**
- **Disconnect the charger from the outlet before attempting any cleaning. This will reduce the risk of electric shock. Removing the battery pack will not reduce this risk.**
- **Never attempt to connect 2 chargers together.**
- **The charger is designed to operate on standard 120V household electrical power. Do not attempt to use it on any other voltage. This does not apply to the vehicular charger.**
- ***WARNING:* Shock hazard. Do not allow any liquid to get inside the charger. Electric shock may result.**
- ***WARNING:* Burn hazard. Do not submerge the battery pack in any liquid or allow any liquid to enter the battery pack. Never attempt to open the battery pack for any reason. If the plastic housing of the battery pack breaks or cracks, return to a service center for recycling.**
- ***CAUTION:* Burn hazard. To reduce the risk of injury, charge only DEWALT rechargeable battery packs. Other types of batteries may overheat and burst resulting in personal injury and property damage.**
- ***CAUTION:* When battery pack is not in use, keep it away from other metal objects like paper clips, coins, keys, nails, screws, or other small metal objects that can make a connection to one terminal to another. Shorting the battery terminals together may cause burns or fire.**

- ***NOTICE:*** **Under certain conditions, with the charger plugged into the power supply, the charger can be shorted by foreign material. Foreign materials of a conduction nature, such as, but not limited to, grinding dust, metal chips, steel wool, aluminum foil or any buildup of metallic particles should be kept away from the charger cavities. Always unplug the charger from the power supply when there is no battery pack in the cavity. Unplug the charger before attempting to clean.**
- **Do not charge the battery pack in an air temperature below +40°F (+4.5°C), or above +104°F (+40°C). This is important and will prevent serious damage to the battery pack.**

Cutting Fluid

- **Use only cutting fluid that has been recommended by STANLEY.**
- **Do not handle cutting fluid until all safety precautions have been read and understood.**
- **Read and understand the Safety Data Sheet for the cutting fluid, found on www.stanleyinfrastructure.com.**
- **Do not get cutting fluid in eyes, on skin or on clothing. If cutting fluid contacts the eyes, flush with water for 15 minutes. For skin contact, wash with soap and water. Wash clothing separately before reuse.**
- **Do not ingest cutting fluid. If cutting fluid is swallowed, do NOT induce vomiting. Give victim a glass of water or milk and call a physician or poison control center immediately. Never give anything by mouth to an unconscious person.**
- **Wear protective gloves, eye protection and face protection when using cutting fluid.**
- **Store cutting fluid in a well-ventilated place and keep the container tightly closed. If cutting fluid is inhaled, remove the victim to fresh air. Immediately seek medical attention.**
- **Dispose of contents/container to local, state, and federal regulations. Empty containers must be completely empty with all closures in place, as per 49CFR173.29 & EPA 40CFR261.7. Do not reuse containers for waste and disposal.**
- **In case of fire, extinguish using CO2, water fog, foam or dry chemical extinguishers. Do not use water to extinguish fire. Water steams may spread fire.**
- **When using cutting fluid, prevent fluid from entering waterways, sewers, basements or confined areas. Avoid runoff into storm sewers and ditches which lead to waterways.**
- **If fluid is spilled,**
  - **Spilled cutting fluid forms smooth, slippery surfaces, which can pose an accident risk. Wear Personal Protective Equipment (PPE) and use caution during clean up.**
  - **Eliminate all ignition sources. Stop the flow of material, if this can be done without risk. Dam the spilled material, where this is possible.**
  - **Contain spilled liquid with sand or earth. DO NOT use combustible materials such as sawdust.**
  - **Absorb spill with inert material (e.g., dry sand or earth), then place in a chemical waste container. Vacuum or sweep up material and place in a disposal container.**

Decals

Decal Placement

GENERAL INFORMATION

The diagrams on this page show the location of the decals used on your tool. The decals are identified by their part numbers, with reductions of the actual decals located on the following page. Use this information to order replacements for lost or damaged decals. Be sure to read all decals before operating the tool. They contain information you need to know for both safety and product longevity.

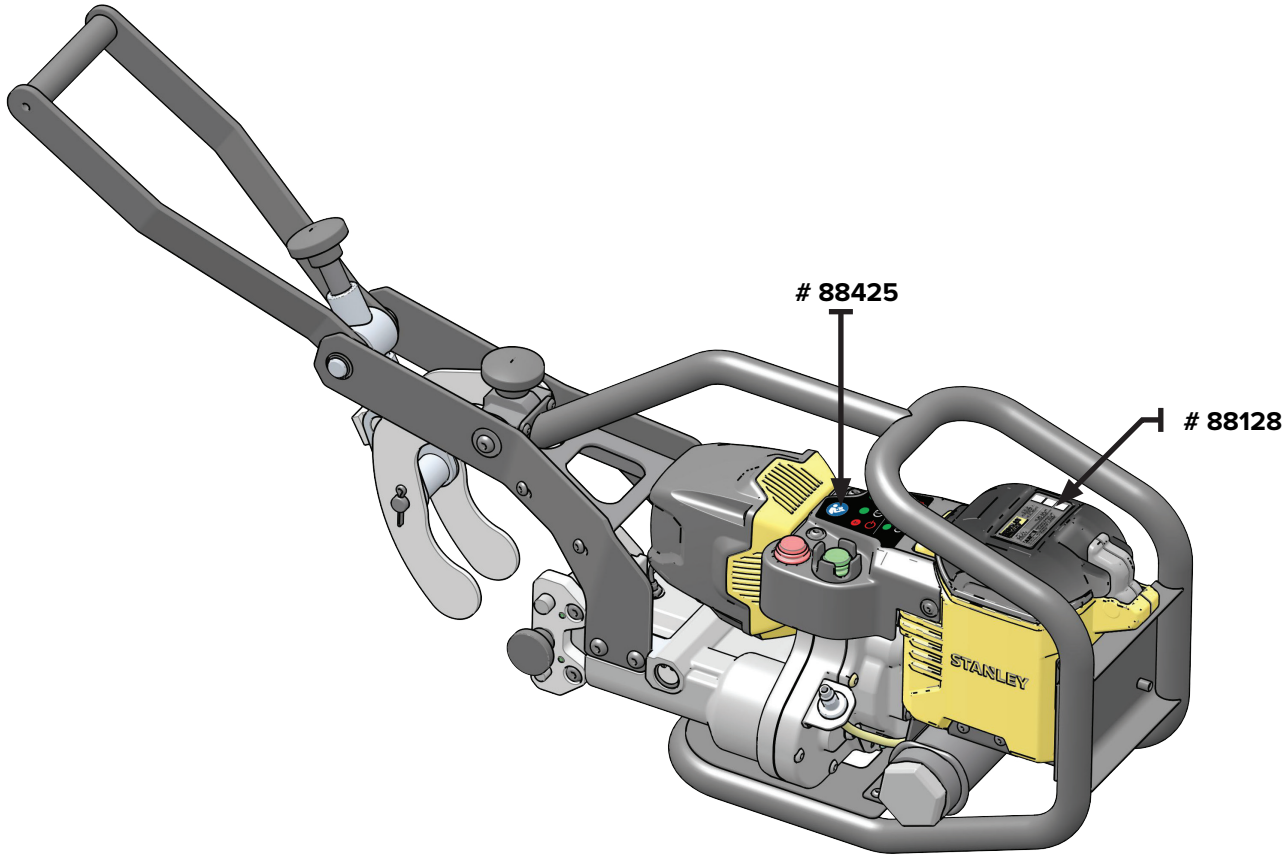

IMPORTANT

Keep all safety decals clean and legible. Replace all missing, illegible, or damaged safety decals. When replacing parts with safety decals attached, the safety decals must also be replaced. Safety decals are available from your local dealer or STANLEY.

REPLACING SAFETY DECALS: Clean the area of application with nonflammable solvent, then wash the same area with soap and water. Allow the surface to fully dry. Remove the backing from the safety decal, exposing the adhesive surface. Apply the safety decal to the position shown in the diagram above and smooth out any bubbles.

Decals

Decal Placement

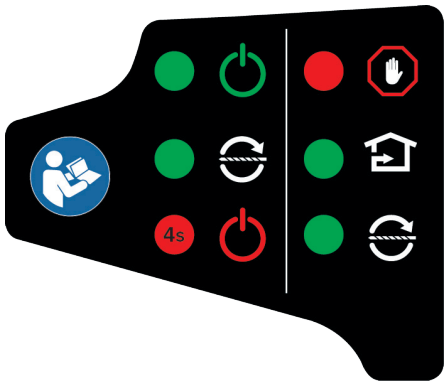

 # 88425 - READ MANUAL / OPERATION DECAL

WARNING!

 # 88128 - READ MANUAL / USE PROPER BATTERY / WEAR PPE

NOTE

Contact your local dealer for logo decals.

Decals

Operation Decal Explanation

Tool Operation

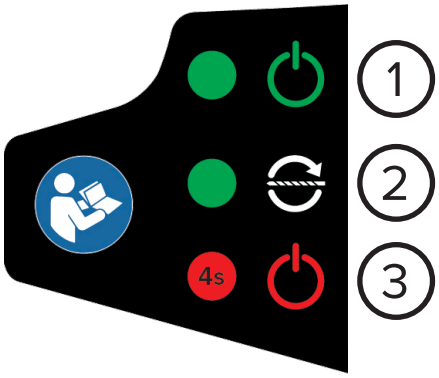

1. Tap the cycle start button (green) to wake up the tool. The button light will turn on.
2. Press cycle start button (green) again to start the drilling cycle.
3. To power down RD60, hold the cycle stop button for 4 seconds. The button light will flash, then turn off.

Tool Stop Procedure

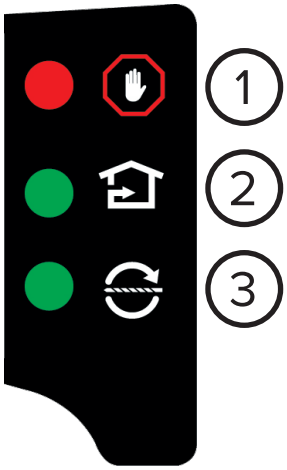

1. To immediately stop the tool, press the cycle stop button (red).
2. Then press the cycle start button (green) to retract the tool to it's home position.
3. Press cycle start button (green) to start a new drilling cycle.

Nomenclature

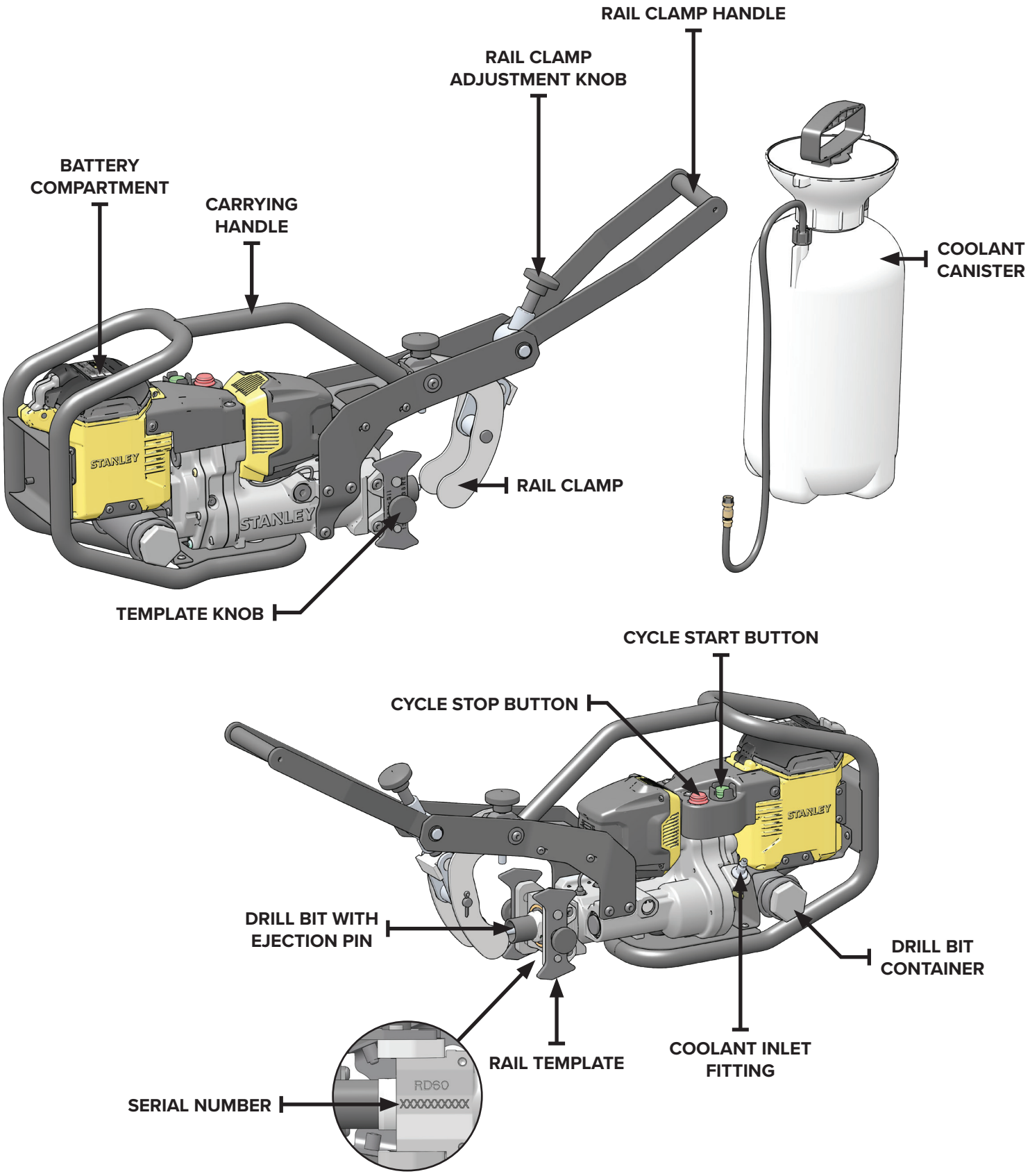

STANLEY®

Installation

GENERAL INFORMATION

RD60 is a battery powered rail drill that cycles automatically. With a DEWALT FLEXVOLT battery and the included hand pumped coolant canister, the RD60 can be used easily in places where hydraulic tools may be difficult to operate.

Read all safety warnings, decals and operating instructions before operating the tool. If there is any portion of this manual that you do not understand, contact your dealer.

⚠ WARNING!

READ MANUAL PRIOR TO INSTALLATION
Improper installation, operation, or maintenance of this equipment could result in serious injury or death. Operators and maintenance personnel should read this manual, as well as all manuals related to this equipment thoroughly before beginning installation, operation, or maintenance.

FOLLOW ALL SAFETY INSTRUCTIONS IN THIS MANUAL.

DISCONNECT BATTERY
Do not install, change tool accessories, clean or perform maintenance on the tool while the battery is connected to the tool. Remove the battery from the tool before performing maintenance.

ACCIDENTAL ENGAGEMENT OF THE TOOL CAN CAUSE SERIOUS INJURY.

CHARGE BATTERY

1. Place the charger on a firm surface and ensure the vents are not covered.

⚠ WARNING!

DO NOT EXPOSE THE CHARGER TO RAIN OR SNOW
Do not immerse the charger in water or any other liquid. Place the charger in a clean, dry space during use.

IMPROPER USE OF THE CHARGER COULD RESULT IN RISK OF FIRE, ELECTRIC SHOCK OR ELECTROCUTION.

2. Plug the charger into a standard 120V household electrical outlet.
3. Insert the battery pack into the charger. Ensure the battery pack is fully seated in the charger. Only use battery packs and chargers that have been recommended by STANLEY.

NOTE

The red light on the charger will blink, indicating that the charging process has started.

4. When the red light remains on continuously, the battery pack is full.

5. Push the battery release button on the battery pack to remove the battery from the charger.

NOTE

The charger and battery pack may become warm to the touch during charging. This normal and does not indicate a problem.

6. Unplug the charger when battery charging is complete.
7. Store charger as described in “Storage” on page 28.

STORE DRILL BIT FOR TRANSPORTATION TO JOBSITE

⚠ WARNING!

DRILL BITS ARE VERY SHARP
Do not touch without proper Personal Protective Equipment (PPE).

SERIOUS CUTS AND ABRASIONS CAN OCCUR

1. Unscrew the drill bit container and insert the drill bit with the ejection pin. Use only 0.75 Inch to 1.5 Inch annular style bits.
2. Insert a drill bit container into the drill bit storage channel.

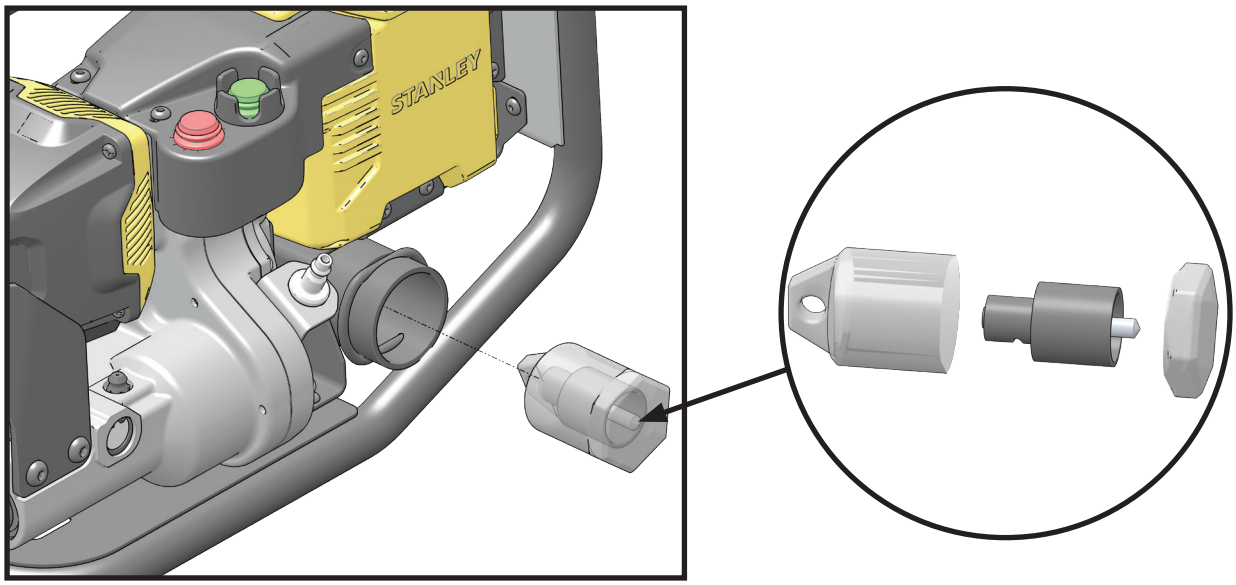

⚠ CAUTION!

DO NOT TRANSPORT TOOL WITH DRILL BIT INSTALLED
Store drill bit in the drill bit storage channel.

PERSONAL INJURY OR DAMAGE TO THE BIT CAN OCCUR.

Operation

INTENDED USE

This tool has been designed and built to drill railroad rail. Use in any other way is considered contrary to the intended use. Compliance with and strict adherence to operation, service and repair conditions as specified by the manufacturer, are also essential elements of the intended use.

⚠ WARNING!

DISCONNECT BATTERY

Do not install, change tool accessories, clean or perform maintenance on the tool while the battery is connected to the tool. Remove the battery from the tool before performing maintenance.

ACCIDENTAL ENGAGEMENT OF THE TOOL CAN CAUSE SERIOUS INJURY.

1. Ensure the battery is not connected to the tool.
2. Grab the carrying handle with your dominant hand.
3. Lift the tool and move it to the jobsite.

INSTALL RAIL TEMPLATE

NOTE

Use only rail templates and rail guides that are recommended by STANLEY. See “Accessories” on page 34 for a list of compatible rail templates and guides. When possible, use the RD60 templates listed.

1. Unscrew the template knobs on the side of the drill head.
2. Place the rail template so the dowel pins are inserted into the template.
3. Screw in the template knobs to secure the rail template to the tool.

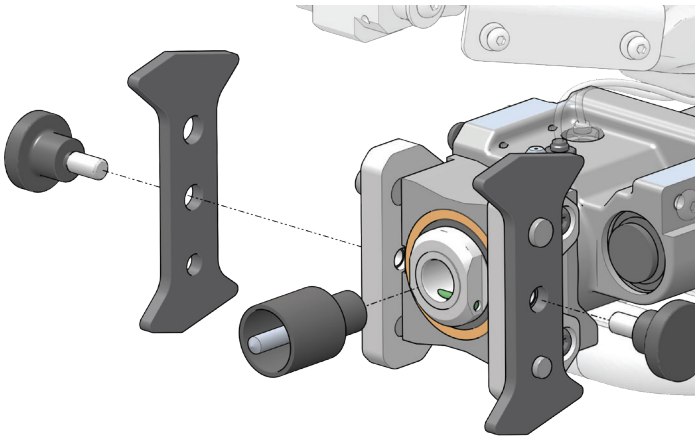

Operation

INSTALL DRILL BIT

1. Remove drill bit from the drill bit storage container.

NOTE

Ensure the ejector pin is in place in the middle of the drill bit.

2. Place drill bit over the drill head.
3. Push the drill bit towards the drill head and twist the bit clockwise.
4. The drill bit will lock into place.

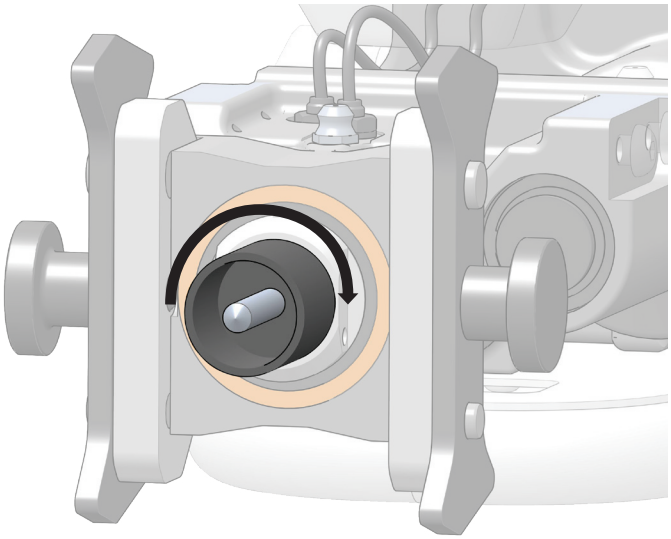

NOTE

To remove the drill bit, see “Removing the Drill Bit” on page 27.

PREPARE COOLANT CANISTER

NOTE

Use only coolant recommended by STANLEY.

1. Open the top of the coolant canister.
2. Pour the supplied coolant into the cannister using a 20:1 water-to-coolant ratio. Use only clean water.
3. Put the lid back on the canister and shake to mix.

ATTACH THE RAIL CLAMP TO THE RAIL

1. Grab the carrying handle with your dominant hand.
2. Grab the clamp handle with your secondary hand.
3. Fit the rail clamp over the top of the rail.
4. Use the rail clamp adjustment knob to tighten the clamp around the rail.

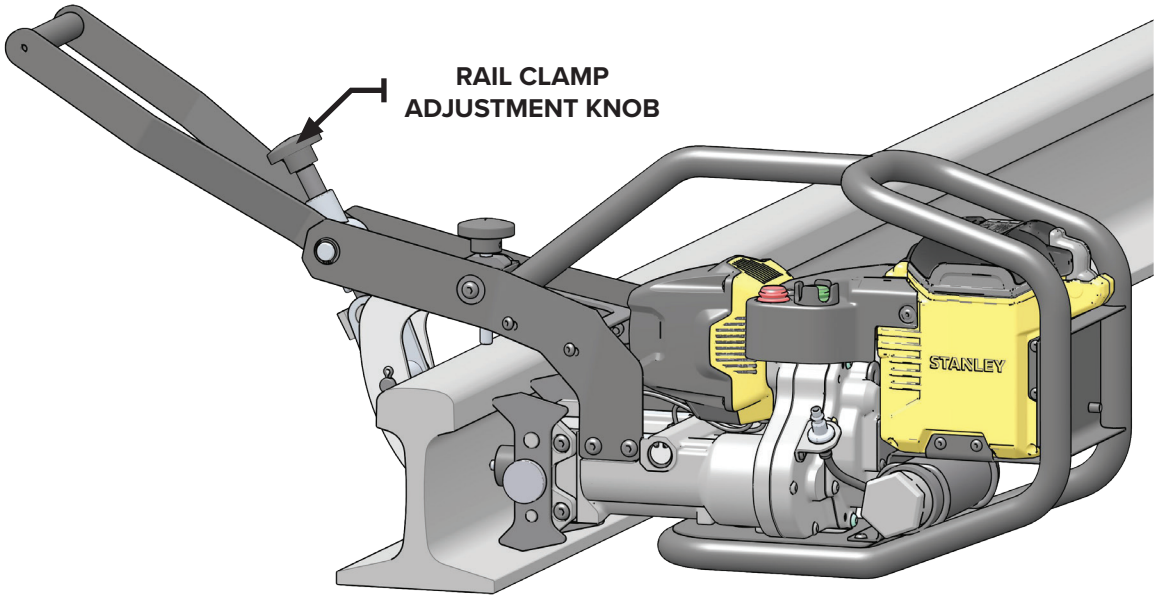

NOTE

Ensure the clamp is tight and will not move during the drilling cycle.

CONNECT AND PRESSURIZE THE COOLANT CANISTER

NOTICE

Check coolant levels regularly when using the tool. Do not allow the coolant canister to run out of coolant. Damage to the drill bit can occur.

Do not connect coolant canister to a tool that is below 32°F (0° C). Coolant can freeze and cause internal damage to the tool.

Operation

1. Connect the coolant canister quick disconnect to the coolant inlet fitting on the tool.
2. Pump the coolant canister handle to increase the pressure in the canister. Pressurize the canister until the pressure relief valve opens.

Note

Route the canister hose so that workers will not trip.

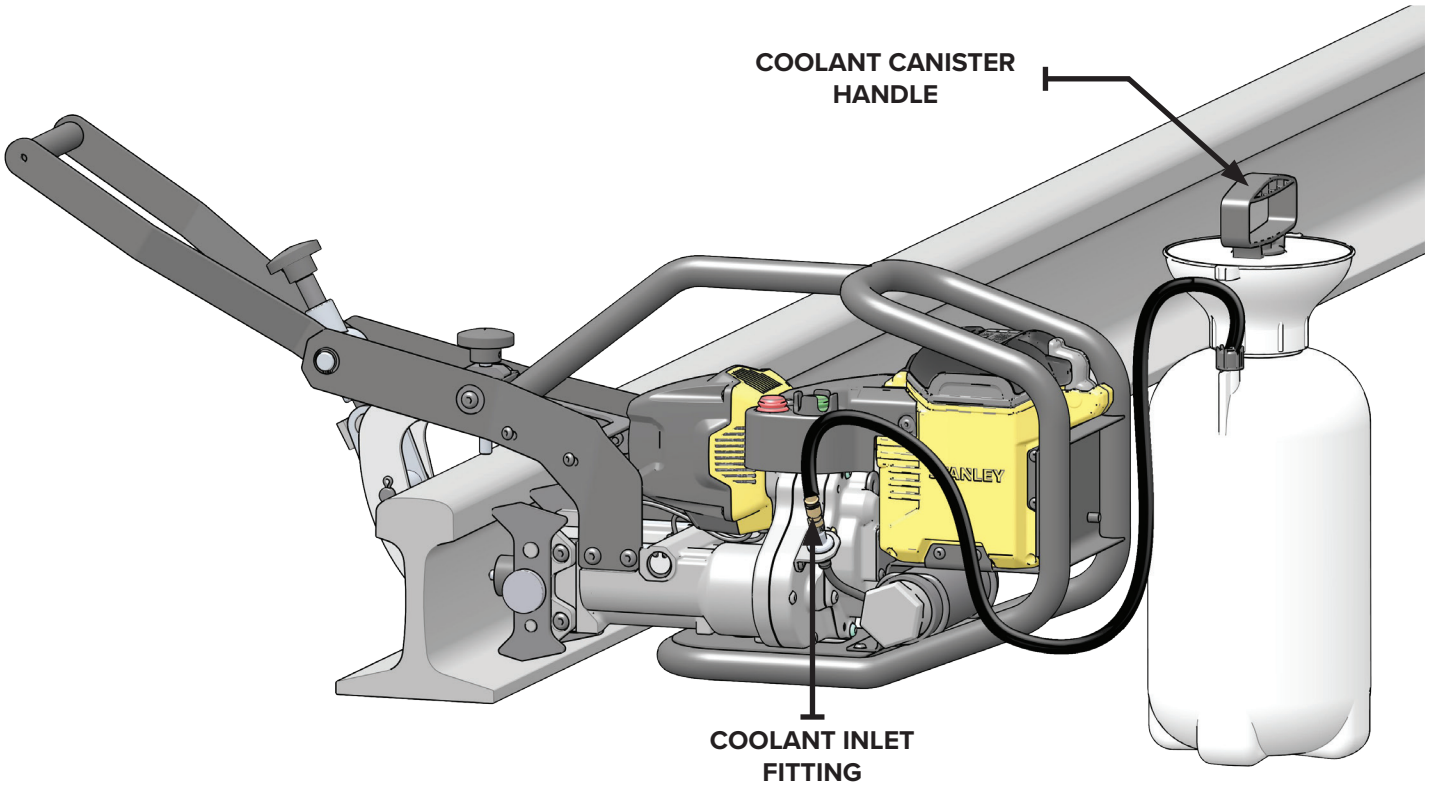

INSERT THE BATTERY

1. Open the battery compartment.
2. Connect a fully charged battery to the battery receptacle inside the battery compartment. Ensure the battery locks in place.
3. Close the battery compartment.

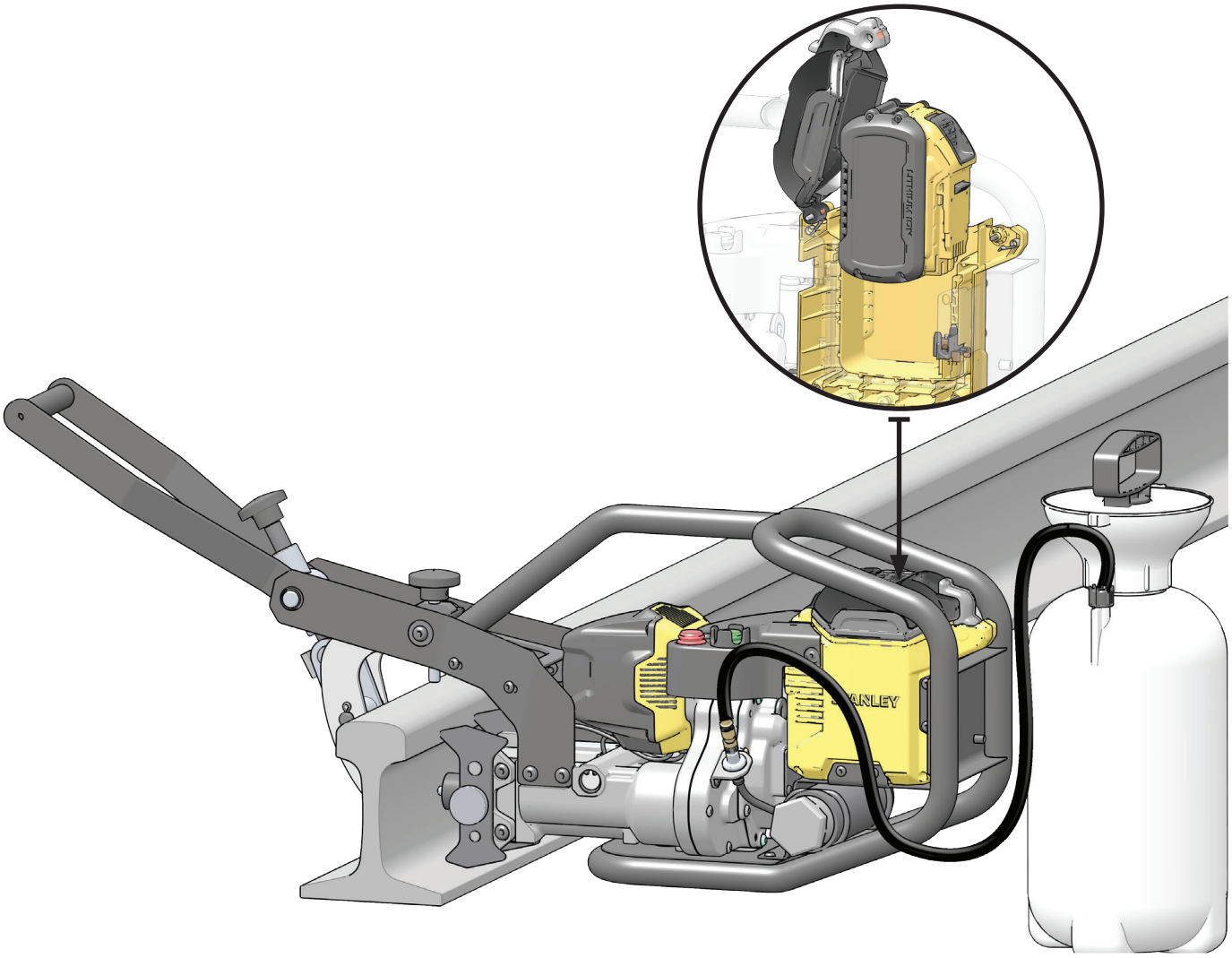

NOTE

To remove the battery, open the battery compartment and press the battery lock to release the battery from the receptacle.

Operation

STARTING THE TOOL CYCLE

⚠ WARNING!

RAIL CLAMP MUST BE SECURELY FASTENED TO THE RAIL
The rail clamp must be attached to the work piece so it does not move during the drilling operation and/or when the cycle is finished.

UNEXPECTED MOVEMENT OF THE CLAMP COULD CAUSE LOSS OF CONTROL AND COULD RESULT IN SERIOUS INJURY TO THE OPERATOR.

1. Tap the cycle start button (green) to wake up the tool. The button light will turn on.
2. Inspect the work area. Ensure bystanders and the tool operator are clear.

⚠ WARNING!

ENTANGLEMENT HAZARD
Keep all body parts, hair and loose clothing away from rotating drives. Entanglement, choking, scalping and laceration can occur if loose clothing, personal jewelry, neck wear, hair or gloves are not kept away from the rotating tool and it's accessories.

KEEP AWAY FROM ROTATING DRIVES

3. Press cycle start button (green) again to start the drilling cycle. The drill will start to rotate and move toward the rail.
4. RD60 will drill and retract without further interaction.
5. To immediately stop the tool, press the cycle stop button (red). Then press the cycle start button (green) to retract the tool to it's home position.
6. Once retracted, the drilled rail slug should automatically eject from the drill bit.
7. Once the rail drill has retracted and the bit has stopped turning, check the bit and ensure the slug has been ejected.

NOTICE

Do not continue to drill if the slug is still in the drill bit. Damage to the tool can occur. See "Removing the Drill Bit" on page 27.

8. Check the area around the bit and clear any metal chips that have built up around the bit.
9. To drill another hole, release the rail clamp, reposition the drill, tighten the rail clamp, then press the cycle start button (green) to start a new cycle.

10. To power down RD60, hold the cycle stop button for 4 seconds. The button light will flash, then turn off.

REMOVING THE DRILL BIT

⚠ WARNING!

DISCONNECT BATTERY
Do not install, change tool accessories, clean or perform maintenance on the tool while the battery is connected to the tool. Remove the battery from the tool before performing maintenance.

ACCIDENTAL ENGAGEMENT OF THE TOOL CAN CAUSE SERIOUS INJURY.

DRILL BITS ARE VERY SHARP
Do not touch without proper Personal Protective Equipment (PPE).

SERIOUS CUTS AND ABRASIONS CAN OCCUR

1. Hold the cycle stop button for 4 seconds to power RD60 off.
2. Remove battery from the battery compartment.
3. Hold the two flat surfaces on the drill head with a wrench. Ensure it will not move.
4. Twist the drill bit counter clockwise and remove it from the drill head.
5. Tap on the exposed end of the ejector pin on the back of the drill bit. The slug will fall out.
6. Reinstall the drill bit as shown in “Install Drill Bit” on page 22.
7. Reinstall the battery as shown in “Insert the Battery” on page 24.

RECHARGE THE BATTERY

RD60 monitors the battery charge and will stop drilling when the battery needs to be recharged. When this happens,

1. Press the cycle stop button (red) to stop the drilling cycle.
2. Press the cycle start button (green) to retract the drill.
3. Open the battery compartment and pull out the battery.
4. Charge the battery as shown in “Charge Battery” on page 19.

Operation

STORAGE

⚠ WARNING!

DISCONNECT BATTERY
Do not install, change tool accessories, clean or perform maintenance on the tool while the battery is connected to the tool. Remove the battery from the tool before performing maintenance.

ACCIDENTAL ENGAGEMENT OF THE TOOL CAN CAUSE SERIOUS INJURY.

- Remove the battery and store the tool and battery in a clean, dry space, away from direct sunlight and excess heat or cold.
- Store batteries and charger away from foreign materials of a conductive nature such as, but not limited to, dust, metal chips, steel wool, aluminum foil, or any buildup of metallic particles.
- Do not freeze or immerse the batteries or charger in water or any liquid.
- Clean the outside surfaces of the tool with a damp cloth. Remove all metal dust and debris.
- Store the tool in a clean and dry space, away from direct sunlight and excess heat or cold.
- Do not store the tool with coolant canister attached or with coolant inside. Coolant can freeze and cause internal damage.
- Store the tool horizontally.

REMOVAL FROM STORAGE

- Inspect tool for damage. If found, have the tool repaired by an authorized DEWALT service center before use.
- Fully charge the tool battery.
- Inspect all the tool safety labels. Replace if they are damaged or not legible. Contact your STANLEY dealer for replacements.

TRANSPORTING

⚠ WARNING!

FIRE HAZARD
Do not store or carry the battery pack so that metal objects can contact exposed battery terminals. For example, do not place the battery pack in aprons, pockets, tool boxes, product kit boxes, drawers, etc., with loose nails, screws, keys, etc.

- Follow all local government regulations that may apply along with recommended tie down points and any equipment safety precautions at the front of this handbook when transporting your tool.
- Ensure the battery is removed, the bit is stowed in the bit storage container and the drill is fully retracted before transport.
- Always use the lifting handle when moving the tool.
- Lift only as high as necessary to load. NEVER lift or transport over people.
- Secure the tool to the transport vehicle in the horizontal position. Ensure tool is secured using the carrying handle and frame as tie down points. Ensure the tool will not move during transport. An unsecured tool could cause personal injury or damage to the tool.

Shipping the DEWALT FLEXVOLT™ Battery

The DEWALT FLEXVOLT™ battery has two modes: Use and Shipping.

Use Mode: When the FLEXVOLT™ battery stands alone or is in a DEWALT 20V max product, it will operate as a 20V Max battery. When the FLEXVOLT™ battery is in a 60V Max or a 120V Max (two 60V Max batteries) product, it will operate as a 60V Max battery.

Shipping Mode: When the cap is attached to the FLEXVOLT™ battery, the battery is in Shipping Mode. Strings of cells are electrically disconnected within the pack resulting in three batteries with a lower Watt hour (Wh) rating as compared to one battery with a higher Watt hour rating. This increased quantity of three batteries with the lower Watt hour rating can exempt the pack from certain shipping regulations that are imposed upon the higher Watt hour batteries.

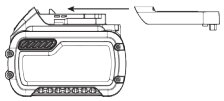

The battery label indicates two Watt Hour Ratings (see example). Depending on how the battery is shipped, the appropriate Wh rating must be used to determine the applicable shipping requirements. If utilizing the shipping cap, the pack will be considered 3 batteries at the Wh indicated for “Shipping”. If shipping without the cap or in a tool, the pack will be considered one battery at the Watt hour rating indicated next to “Use”

example of Use and Shipping label marking

USE: 120 Wh Shipping: 3 x 40 Wh

Transport Wh rating indicated 3 x 40 wh, meaning 3 batteries of 40 Watt hours each. The Use Wh rating indicates 120 Watt hour (1 battery implied).

Maintenance

GENERAL INFORMATION

Regular maintenance is the key to long equipment life and safe operation. Maintenance requirements have been reduced to an absolute minimum. However it is very important that these maintenance functions be performed as described below.

⚠ WARNING!

DISCONNECT BATTERY

Do not install, change tool accessories, clean or perform maintenance on the tool while the battery is connected to the tool. Remove the battery from the tool before performing maintenance.

ACCIDENTAL ENGAGEMENT OF THE TOOL CAN CAUSE SERIOUS INJURY.

Procedure	Every 8 Hours (Daily)
Inspect tool for damage. If found, have the tool repaired by an authorized DEWALT service center before use. Do not operate a damaged, improperly adjusted, modified or incompletely assembled tool.	✔
Inspect all the tool safety labels. Replace if they are damaged or not legible. Contact your STANLEY dealer for replacements.	✔
Check the bit and replace if necessary. RD60 bits are designed to break when their lifespan has been depleted.	✔
Check coolant level in the coolant cannister. Fill if necessary.	✔
Remove the battery and clean the tool using a damp cloth. Remove metal dust and debris.	✔
Check speed of the drill. If speed is too slow, charge battery. If speed is too fast, have the tool repaired by an authorized DEWALT service center before use. Do not operate a damaged, improperly adjusted, modified or incompletely assembled tool.	✔

Procedure	Every 1 Year
Have the tool serviced by an authorized DEWALT service center..	✔

Troubleshooting

Problem	Possible Cause	Possible Solution
BATTERY PACK IS NOT CHARGING PROPERLY	No power to charger	Check operation of receptacle by plugging in a lamp or other appliance.
		Check to see if receptacle is connected to a light switch which turns power off when you turn out the lights.
	Temperature is outside the operating range of the charger	Move the charger and battery pack to a location where the surrounding air temperature is approximately 60°F - 75°F (18° - 27° C).
	Other issue	Take the tool, battery and charger to an authorized DEWALT service center.
TOOL WILL NOT DRILL THROUGH RAIL OR DOES NOT PERFORM AS WELL AS IT ONCE DID	Low battery charge	Stop the drill and retract the bit. Remove and charge the battery.
	No Coolant to the bit	Ensure the coolant canister is full and pressurized. Fill if necessary.
	Tool Failure	Take the tool, battery and charger to an authorized DEWALT service center.
TOOL WILL NOT RETRACT FROM THE RAIL OR DOES NOT DRILL THROUGH A RAIL	Improperly adjusted / loose rail clamp	Ensure the rail clamp is tight around the rail and that the rail clamp adjustment knob is tight.

Tool Disposal

Tool Body
Disassemble the tool and dispose of all non-metal parts. Take care to properly collect all fluids. Recycle the metal components. Contact your local municipal recycling authorities for recycling instructions.

Gear Oil
Drain the gear oil and collect it for recycling. Do not throw away or pour down the drain. Contact your local municipal recycling authorities for recycling instructions.

Cutting Fluid
Dispose of contents/container according to local, state, and federal regulations. Empty containers must be completely empty with all closures in place, as per 49CFR173.29 & EPA 40CFR261.7. Do not reuse containers for waste and disposal.

Batteries
The RBRC® (Rechargeable Battery Recycling Corporation) seal on the nickel cadmium, nickel metal hydride or lithium-ion batteries (or battery packs) indicates that the costs to recycle these batteries (or battery packs) at the end of their useful life have already been paid by DEWALT. In some areas, it is illegal to place spent nickel cadmium, nickel metal hydride or lithium-ion batteries in the trash or municipal solid waste stream and the Call 2 Recycle® program provides an environmentally conscious alternative.

Call 2 Recycle, inc., in cooperation with DEWALT and other battery users, has established the program in the United States and Canada to facilitate the collection of spent nickel cadmium, nickel metal hydride or lithium-ion batteries to an authorized DEWALT service center or to your local retailer for recycling. You may also contact your local recycling center for information on where to drop off the spent battery. RBRC® is a registered trademark of Call 2 Recycle, Inc. RBRC™ is a registered trademark of the Rechargeable Battery Recycling Corporation.

Specifications

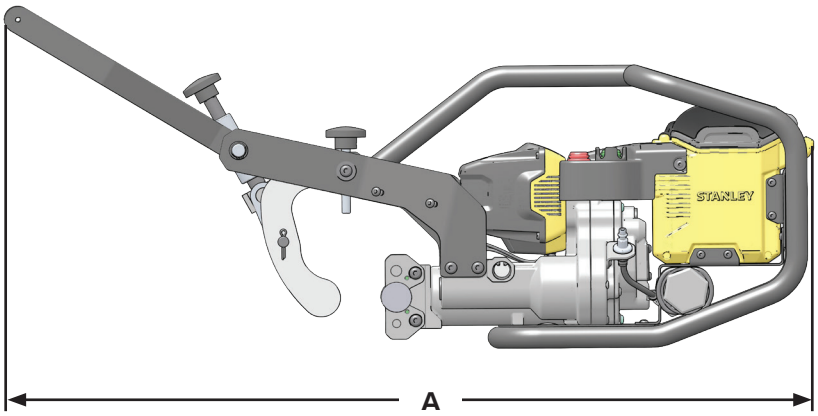

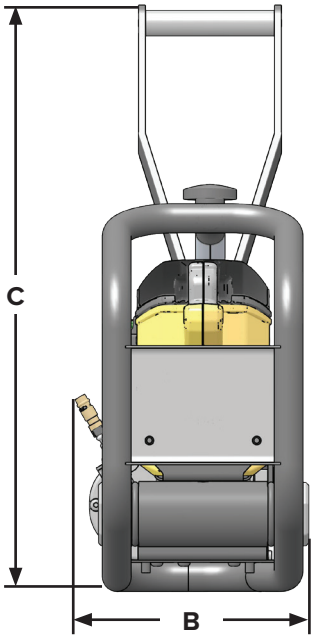

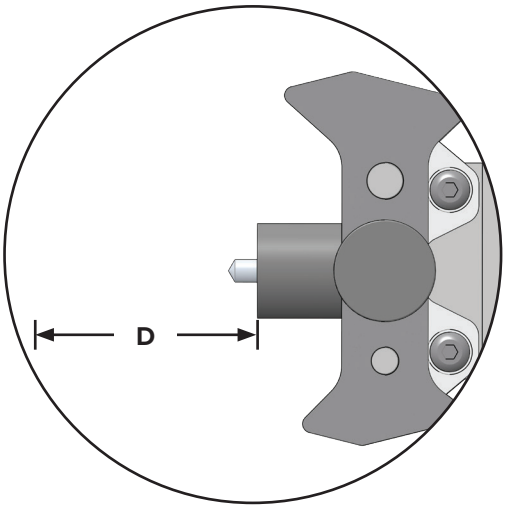

SPECIFICATIONS AND DESIGN ARE SUBJECT TO CHANGE WITHOUT NOTICE AND WITHOUT LIABILITY THEREFOR.

RD60 Cordless Rail Drill	
Description	**Value**
A. Overall Length (Handle Down)	38 In (965 mm)
B. Overall Width	7.5 In (190 mm)
C. Overall Height (Handle Down)	16 In (406 mm)
D. Max. Drilling Length	1.25 In (31.8 mm)
Weight (w/o bit and battery)	42 lbs.(19 Kg)
Bit Type	Twist Lock Annular
Battery Type	60V DEWALT FLEXVOLT
RPM	250-275
Holes per Battery Charge	10 - 15
Drill Cycle Time	74 sec
Hole Diameter (Min-Max)	0.75 - 1.5 In (19 - 38 mm)
Coolant Canister Capacity	2 Gal

Accessories

RAIL TEMPLATES / RAIL GUIDES

RD60 Rail Templates and Rail Guides			
Rail Size	**Drill Templates (Double Sided / Single Sided**	**Guide Assy PN: ING (mm/ Inches)**	**Country**
60 ASCE (6040)#	(34525)		USA
65 ASCE (6540)#	(35975)		USA
68GN	(52636)	38644 [2 1/8 X 4 1/2 X 7]	USA
70 ASCE #	(49246)		USA
72 CHI & NW (7250)	(35876)		USA
75 ASCE (7540)	34262	22631 [2 11/16 X 5 1/2 X 5 1/2]	USA
75 GRT. NO.-1893	(35701)		USA
75 U PAC C.R.S.#	(36001)		USA
77 1/2 GRT. NO. #	33720 (35876)	38644 [2 1/8 X 4 1/2 X 7]	USA
80 ASCE (8040) #	(35626) / 38660		USA
80 GRT. NOR.#	33720 (35876)	38644 [2 1/8 X 4 1/2 X 7]	USA
85 ASCE std (8504 /8540)	(34915)	[2 7/16 X 7 X 6] & (35358) [2 7/16 x 6x 6]	USA
85 CAN. PAC. (8524)#	(35628 HD)		USA
85 CP Head Free (37337)	(37337 HD)		USA
85 GRT. NOR.#	33720 (35876)	[2 7/16 X 5]	USA
85PS	37139		USA
85 SOO LINE (8520)	(35630 HD)		USA
90 ARA-B (9030) 2 11/32 ELEVATION	34263		USA
90 ASCE (9040)	(36046)		USA
90 C&NW (9035)	(35715)		USA
90 GN	33720	35358 (2 7/16 X 6)	USA
90 RA (ARA-A)(9020) 90 SF	31978 / (31984)/35105 (65948 HD)	22631 [2 11/16 X 5 1/2 X 5 1/2] 34680 [2-13/32 X 5 X 5]	USA
100 ARA-A (10020)	34159 / 35438/38660	34526 [3 X 6]	USA
100 ARA-B (10030) / 100-8	88269 (34916)		USA
100 RA Head Free	(37367)		USA
100 RE std (10025) 2 45/64 ELEVATION	34263 (65959 HD)	36037 [2 1/2 x 6 x 6]	USA

Accessories

RD60 Rail Templates and Rail Guides			
Rail Size	**Drill Templates (Double Sided / Single Sided**	**Guide Assy PN: ING (mm/ Inches)**	**Country**
100 RE Head Free (37341)	(37341 HD)		USA
100 RE	88269		
100 CN&W (10035)	(34982)	39229 [2-31/32 x 6]	USA
100 GRT. NO.	(35633)	38645 [2 7/16 X 7]	USA
100 NH	(80788)		USA
100PS	37139		USA
100 ASCE (10040)	(65761 HD)		USA
105 DUDLEY (10524)	(34917)		USA
105 DUDLEY (Offset)	(58508 Offset Template)	58468 [2 x 4 3/4 x 4 3/4]	USA
107 NH	(74839)		USA
110 GRT NO (11036)	(35973)	38645 [2 7/16 X 7]	USA
110 RE GUARD RAIL	(35151)		USA
110 RE (11025) 2 5/8 ELEVATION	(34597)	35357 [2 23/32 x 5 1/2]	USA
110 RE (11025) 2 53/64 ELEVATION	(38683)		USA
112 RE (11228) 2 7/8" Elevation	33721 / 31979 / 31980 / 35105 (31985) (62201 HD)	33687 [2 1/2 X 6 1/2 X 6 1/2]	USA
112TR	33721	33687 [2 1/2 X 6 1/2 X 6 1/2]	USA
113 HEAD FREE	(34598)		USA
115 AREA RETARDER 3.484 fixed Elevation	(34882 FIXED) (34935 ADJ.)	34912 FIXED / 34933 ADJ. [3 1/2]	USA
115 AREA (11525) 2 7/8" Elevation	31979 / 31980 / 35105 / 35438 (31985) (62201 HD)	22625 [3 1/2 X 6 X 6]	USA
115 RE GUARD RAIL 3 1/32" Elevation	(35153)		USA
115 RE	88267 / 88268 (88270)		

Accessories

RD60 Rail Templates and Rail Guides			
Rail Size	**Drill Templates (Double Sided / Single Sided**	**Guide Assy PN: ING (mm/ Inches)**	**Country**
119 AREA (11922) 2 7/8" Elevation	31979 / 31980 / 35105 / (31985) (62201 HD)	22625 [3 1/2 X 6 X 6]	USA
119 RE	88267 / 88268 (88270)		
122 C.B. & O.	34159(32279)	22625 [3 1/2 X 6 X 6]	USA
127 DUDLEY (12723)	34264	22625 [3 1/2 X 6 X 6]	USA
129 TR	(35003)		USA
130 AREA (13025) (3 1/16 ELEVATION)"	(36048)		USA
130 AREA HEAD FREE (3 1/16 ELEVATION)	(41772)		USA
130 AREA HEAD FREE (2 15/16 ELEVATION)	(38579)		USA
130 AREA HEAD FREE (2 3/4 ELEVATION)	(38643)		
130 PS (13031)	(34918)		USA
131	88267 (88272)		
131 RE (13128)	31980 / 31981 / (31986) (62203 HD)	33687 [2 1/2 X 6 1/2 X 6 1/2]	USA
131 RE-M	34264	22625 [3 1/2 X 6 X 6]	USA
"131RE 3-1/4"" ELEVATION"	(72502)		USA
132	88267 (88272)		
132 HEAD FREE	(34599)		USA
132 AREA (13225)	31980 / 31981 / (31986) (62203 HD)	22625 [3 1/2 X 6 X 6]	USA
132 RE GUARD RAIL	(35155)		USA
133 AREA (13331)	31979 / 31981 / (31987)	22625 [3 1/2 X 6 X 6]	USA
133 RE	88268 (88271)		
136 AREA (13622) (Std. 3 3/32" Elevation)	31980 / 31981 / (31986) (62203 HD)	22625 [3 1/2 X 6 X 6]	USA
136 AREA (3" Elevation)	(44977)	44975 [2-23/32 x 6 x 7]	USA
136 RE GUARD RAIL (3 9/32 Elevation)	(35155)		USA

RD60 Rail Templates and Rail Guides			
Rail Size	**Drill Templates (Double Sided / Single Sided**	**Guide Assy PN: ING (mm/ Inches)**	**Country**
136 RE STOCK RAIL (3 11/32 Elevation)	(66945 HD)		USA
136 RE	88267 (88272)		
136 LVH	(62412)		USA
136 LV (13633)	(65075)		USA
140 AREA (14031)	31978 / (31988)	22625 [3 1/2 X 6 X 6]	USA
141 AREA	(43674) (65964 HD)	22625 [3 1/2 X 6 X 6]	USA
152 PS	(43576)		USA
155 PS	(43578)		USA
906 D&RG	88563 (88562)		USA
41 KG AS1085	(35353)	41773 (62 X 127 X 127)	AU
47 KG AS1085	(35353)	41773 (62 X 127 X 127)	AU
50 KG AS1085	(35351)	41774 (88 X 130 X 130)	AU
53 KG (107#) AS1085	(34185)	41774 (88 X 130 X 130)	AU
60 KG AS1085.1	(34187)	41774 (88 X 130 X 130)	AU
TR-32 (see 65 ASCE)	(35975)		BR
TR-37 (see 75ASCE)	34262	22631 [2 11/16 X 5 1/2 X 5 1/2]	BR
TR-45 (see 90ARA-A)	34262	22631 [2 11/16 X 5 1/2 X 5 1/2]	BR
TR-50 (see 100RE)			BR
TR-57 (see 115AREA)			BR
TR-68 (see 136AREA)			BR
50 KG N	31975 (43583)	29963 (77 X 130 X130)	CN
60 KG	(69512)	69510 (76 X 140 X 140)	CN
46 KG U 33	31973	29436 (57.5 X 160)	FR
50 KG U 50	31974	29434 (60 X 170)	FR
LP48	31973	29435 (65 X 120 X 160)	FR
60 KG UIC	31974	29434 (60 X 170)	FR
S49	31976 / (31982)	31772 (46 X 165)	DE
S54	31976 / (31982)	31772 (46 X 165)	DE
60 KG UIC/UNI	31976 / (31983)	31772 (46 X 165)	DE
54 KG UIC	34261		NL
NP46	34261		NL
I.R.S. 52KG	(66830)	66831 (80 X 166)	IND
60KG UIC	(31983)	66831 (80 X 166)	IND

RD60 Rail Templates and Rail Guides			
Rail Size	**Drill Templates (Double Sided / Single Sided**	**Guide Assy PN: ING (mm/ Inches)**	**Country**
36 KG U 33			ITA
50 KG UNI **	31976 / (31982)	30675 (47 X 165)	ITA
60 KG UIC/UNI	31976 / (31983)	30675 (47 X 165)	ITA
60 KG	31975	29963 (77 X 130 X 130)	JP
50 KG N	31975 (43583)	29963 (77 X 130 X 130)	JP
P50	(66321 HD)	66324 (65 X 150 X 140)	RU
P65	(66323 HD)	66326 (95 X 220)	RU
54KG UIC	34261	32276 (58 X 170)	ES
37 KG JIS/JRS	(43580)	44927 (60.5 X 127)	TW
50 KG N	31975 (43583)	29963 (77 X 130 X 130)	TW
60 KG UIC	31976	31772 (46 X 165)	TW
87lb B.H.	(35251)		UK
90lb B.H.	(35255)	(35284) (60 X 114)	UK
92lb F.B.	(35257)	(35283) (54 X 114)	UK
BS 95 B.H	31977		UK
95lb F.B. MARK A	(35249)		UK
95lb F.B. MARK B	(35470)		UK
98			UK
109BR			UK
BS 113A (54KG UIC) 65mm hole elevation	31977	31779 (60.32 X 127 X 203)	UK
54KG UIC (BS 113A) 70mm hole elevation	34261	38889 (65 X 200)	UK
UIC60 INSULATED	(71558)	71459 (62 X 170 X 170)	UK
CIE 50	(39233)	39236 (57 X 120)	UK
Rilc/Rilr	(E32009)		EUROPE
Ri60/Ri60n	(E32010)		EUROPE
PH37	(E32011)		EUROPE

Accessories

CONSUMABLES

Consumables	
Part Number	**Description**
88132	Annular Cutter - 1.5 In Diameter
88133	Annular Cutter - 1.375 In Diameter
88131	Annular Cutter - 1.312 In Diameter
88134	Annular Cutter - 1.25 In Diameter
88135	Annular Cutter - 1.1875 In Diameter
88136	Annular Cutter - 1.125 In Diameter
88137	Annular Cutter - 1.0625 In Diameter
88138	Annular Cutter - 1 In Diameter
88139	Annular Cutter - 32 mm Diameter
88266	Drill Bit Ejection Pin
88274	Coolant - 1 Liter

BATTERIES, CHARGERS & OTHER ACCESSORIES

Batteries and Chargers	
Part Number	**Description**
DCB612	12 AH DEWALT FLEXVOLT Battery
DCB1112	12 Amp Fast Charger
DCB104	4 Port Battery Charger
24774	Coolant Cannister with Hose

Warranty

In order to provide you with the most UP-TO-DATE Warranty information, STANLEY Warranty information can be found at www.stanleyinfrastructure.com.

STANLEY Infrastructure

INDUSTRIAL TOOLS & ATTACHMENTS

PALADIN STANLEY LABOUNTY PENGO

© 2021 Stanley Black&Decker, Inc.

New Britain, CT 06053 USA