STANLEY®

MB05
MOUNTED
HYDRAULIC BREAKER

USER MANUAL
Safety, Operation and Maintenance

© 2014 STANLEY Black & Decker, Inc.
New Britain, CT 06053
U.S.A.
70795 3/2020 Ver. 25

TABLE OF CONTENTS

SAFETY SYMBOLS....4
SAFETY PRECAUTIONS....5
TOOL STICKERS & TAGS....8
OPERATION....9
TROUBLESHOOTING....14
MAINTENANCE....15
CHARGING THE ACCUMULATOR....16
WEAR TOLERANCES....17
PROPER CARE OF TOOL BITS....18
FLOW TEST PROCEDURES....22
DEFINITION OF TERMS....24
SPECIFICATIONS....25
ACCESSORIES....26
MB05 POWER CELL ILLUSTRATION....27
MB05 POWER CELL PARTS LIST....28
MB05 HOUSING PARTS....29
MB05S02 SKID STEER MOUNTING BRKT....30
MB05S04 C&P027 TOP SKID STEER....31
MB05S05 SKID STEER XCHANGE TOP....32

IMPORTANT

To fill out a product warranty validation form, and for information on your warranty, visit www.stanleyinfrastructure.com and select the Company tab > Warranty.

Note: The warranty validation record must be submitted to validate the warranty.

SERVICING: This manual contains safety, operation and routine maintenance instructions. STANLEY Infrastructure recommends that servicing of hydraulic tools, other than routine maintenance, must be performed by an authorized and certified dealer. Please read the following warning.

⚠WARNING

SERIOUS INJURY OR DEATH COULD RESULT FROM THE IMPROPER REPAIR OR SERVICE OF THIS TOOL.

REPAIRS AND / OR SERVICE TO THIS TOOL MUST ONLY BE DONE BY AN AUTHORIZED AND CERTIFIED DEALER.

For the nearest certified dealer, call STANLEY Infrastructure at (503) 659-5660 and ask for a Customer Service Representative.

SAFETY SYMBOLS

Safety symbols and signal words, as shown below, are used to emphasize all operator, maintenance and repair actions which, if not strictly followed, could result in a life-threatening situation, bodily injury or damage to equipment.

This is the safety alert symbol. It is used to alert you to potential personal injury hazards. Obey all safety messages that follow this symbol to avoid possible injury or death.

DANGER — This safety alert and signal word indicates an imminently hazardous situation which, if not avoided, will result in death or serious injury.

WARNING — This safety alert and signal word indicates a potentially hazardous situation which, if not avoided, could result in death or serious injury.

CAUTION — This safety alert and signal word indicates a potentially hazardous situation which, if not avoided, could result in death or serious injury.

CAUTION — This signal word indicates a potentially hazardous situation which, if not avoided, may result in property damage.

NOTICE — This signal word indicates a situation which, if not avoided, will result in damage to the equipment.

IMPORTANT — This signal word indicates a situation which, if not avoided, may result in damage to the equipment.

Always observe safety symbols. They are included for your safety and for the protection of the tool.

LOCAL SAFETY REGULATIONS

Enter any local safety regulations here. Keep these instructions in an area accessible to the operator and maintenance personnel.

SAFETY PRECAUTIONS

SERVICING THE STANLEY HYDRAULIC BREAKER. This manual contains safety, operation, and routine maintenance instructions. STANLEY recommends that servicing of hydraulic tools, other than routine maintenance, must be performed by an authorized and certified dealer. Please read the following warning.

⚠WARNING

SERIOUS INJURY OR DEATH COULD RESULT FROM THE IMPROPER REPAIR OR SERVICE OF THIS TOOL.

REPAIRS AND / OR SERVICE TO THIS TOOL MUST ONLY BE DONE BY AN AUTHORIZED AND CERTIFIED DEALER.

⚠ WARNING

Do not operate the breaker unless the following safety instructions have been thoroughly read and understood! Read this manual before installing, operating or maintaining this equipment.

- A flying projectile from the breaker, breaker tool, rock or other material may enter the operator's compartment and cause serious or fatal injury to the operator. Personal protection equipment must be used.
- A flying projectile from the breaker, breaker tool, rock or other material may cause serious or fatal injury to bystanders. Never operate the breaker when bystanders are in the work area.
- On some machines/carriers, the breaker can enter the operator's compartment if it breaks loose and swings toward the operator. Make sure that suitable impact shields are used when operating the breaker with this type of equipment.
- Do not operate the breaker unless all safety decals described in this manual are in place. The decals must be inspected periodically to ensure that all wording is legible. The decals must be replaced if illegible. Replacement decals can be obtained from your authorized Stanley Distributor.
- When operating the breaker you must use ear protection, eye protection, and breathing protection.

SAFETY PRECAUTIONS

Tool operators and maintenance personnel must comply with the safety precautions given in this manual and on the stickers and tags attached to the tool and hose.

These safety precautions are given for your safety. Review them carefully before operating the tool and before performing general maintenance or repairs.

Supervising personnel should develop additional precautions relating to the specific work area and local safety regulations. If so, place the added precautions in the space provided in this manual.

The MB05 Mounted Hydraulic Breaker will provide safe and dependable service if operated in accordance with the instructions given in this manual. Read and understand this manual and any stickers and tags attached to the tool and hoses before operation. Failure to do so could result in personal injury or equipment damage.

Check the rules and regulations at your location. The rules might include an employer's work safety program. Regulations may identify hazards such as working around utility supply lines or hazardous slopes.

BE THOROUGHLY TRAINED BEFORE OPERATING THE UNIT ALONE

- Operator training must start in an area without bystanders. Use all the controls until the operator can control the machine fully under the conditions of the work area.
- When learning to operate a machine, do so at a slow pace.

KNOW THE WORK CONDITIONS

- The operator must know any prohibited uses or work areas for the machine. For example, excessive slopes and poor or dangerous terrain conditions must be avoided.

OBEY SAFETY RULES

- Operate the breaker in accordance with all laws and regulations which affect you, your equipment and the worksite.
- Do not operate the breaker until you have read this manual and thoroughly understand all safety, operation and maintenance instructions.
- The operator must be familiar with all prohibited work areas such as excessive slopes and dangerous terrain conditions.
- Do not operate the breaker until you have read the carrier equipment manual and thoroughly understand all safety, operation and maintenance instructions. The word “carrier”, as used in this manual, means a backhoe or excavator or similar equipment used to operate the breaker.
- Ensure that all maintenance procedures recommended in this manual are completed before using the equipment.
- The operator must not operate the breaker or carrier if any people are within the area where they may be injured by flying debris or movement of the equipment.
- Know the limits of your equipment.
- Establish a training program for all operators to ensure safe operation.
- **Warning:** Use of this tool on certain materials could generate dust, potentially containing a variety of hazardous substances such as asbestos, silica or lead. Inhalation of dust containing these or other hazardous substances could result in serious injury, cancer or death. Protect yourself and those around you. Research and understand the materials you are cutting. Follow correct safety procedures and comply with all applicable national, state or provisional health and safety regulations relating to them, including, if appropriate arranging for the safe disposal of the materials by a qualified person.
- Do not operate the tool unless thoroughly trained or under the supervision of an instructor.
- Become familiar with the carrier controls before operating the carrier and the breaker.
- When operating the breaker you must use ear protection, eye protection, and breathing protection.
- While learning to operate the breaker and carrier, do so at a slow pace. If necessary, set the carrier mode selector to the slow position.
- Make sure all controls (levers and pedals) are in the NEUTRAL position before starting the carrier.

SAFETY PRECAUTIONS

- While operating the breaker and carrier, keep hands and feet on the controls at all times.
- Before leaving the carrier, always lower the boom and insure the carrier is stable. Never leave the machine with the engine running. ALWAYS ENGAGE THE PARKING BRAKE.
- Stop the engine before attempting to make any repairs, adjustments or servicing to either the carrier or the breaker.
- Do not operate the tool at oil temperatures above 190 °F/88 °C. Operation at higher temperatures can damage the internal components of the breaker and carrier and will result in reduced breaker performance.
- Do not operate a damaged, leaking, improperly adjusted or incompletely assembled breaker.
- Do not modify the breaker in any manner.
- Use only tool bits supplied by STANLEY. Use of tool bits supplied by another manufacturer may damage the breaker and will void the warranty.
- To avoid personal injury or equipment damage, all breaker repair, maintenance and service must only be performed by authorized and properly trained personnel.
- If you do not understand how to safely operate your breaker, contact an authorized STANLEY Dealer for assistance.
- Keep this manual with the breaker.
- Do not operate this equipment if you are taking medication which may affect your mental judgement or physical performance.
- Do not operate this equipment if you are under the influence of drugs or alcohol.

TOOL STICKERS & TAGS

Refer to the Parts Illustration page in this manual for proper placement of stickers.

70753
Model Number Sticker

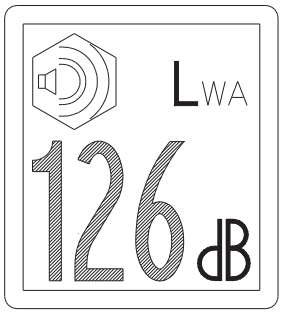

66218
Sound Power Sticker

66764
Made in USA Sticker

47351
Composite Warning Sticker

74705
STANLEY Logo Sticker

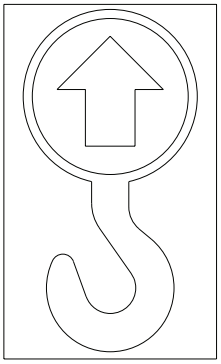

47352
Lift Point Sticker

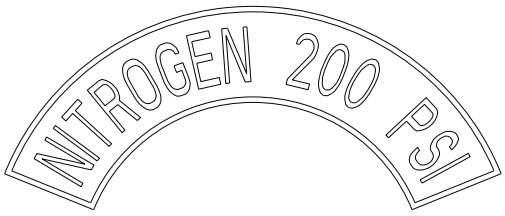

70754
Nitrogen Sticker 200-PSI

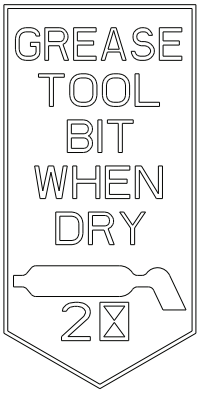

70972
Grease Sticker

OPERATION

PRE-INSTALLATION INSTRUCTIONS

CARRIER SIZE

Check the Specifications section of this manual to determine correct carrier size, hydraulic flow and pressure requirements.

If hydraulic pressure, hydraulic back-pressure, hydraulic flow or excavator weight class are exceeded, the tool warranty is void.

EXISTING EQUIPMENT HYDRAULICS VS. APPLICATION ATTACHING KITS

Using existing equipment hydraulic auxiliary systems for operating hydraulic tools could cause problems for the hydraulic tool and the hydraulic system if not set up properly. Do not plug into the hydraulic system without confirming pressure and flow to the hydraulic tool. Spare spool valves, dipper circuits, etc., are just a few examples of easily accessible hydraulic circuits which could prove to cause problems for hydraulic tool usage.

STANLEY has, for many years, developed ATTACHING KITS for adapting to existing hydraulic systems of many popular carriers.

If your equipment does not contain an attaching kit, ask your STANLEY dealer for information, installation, and pricing on a kit which matches your equipment needs.

TEST THE HYDRAULIC SYSTEM

1. Have your STANLEY dealer test the carrier hydraulic system to make sure the system is operating at the manufacturers specified capacity and pressure ratings.
2. Be sure the fluid in the hydraulic system is clean.
3. Check the hydraulic filter. Replace the filter if dirty or deteriorated.
4. Have your STANLEY dealer test the circuit to make sure that the circuit is supplying the specified flow and pressure rating for the breaker. See the Specifications section of this manual.

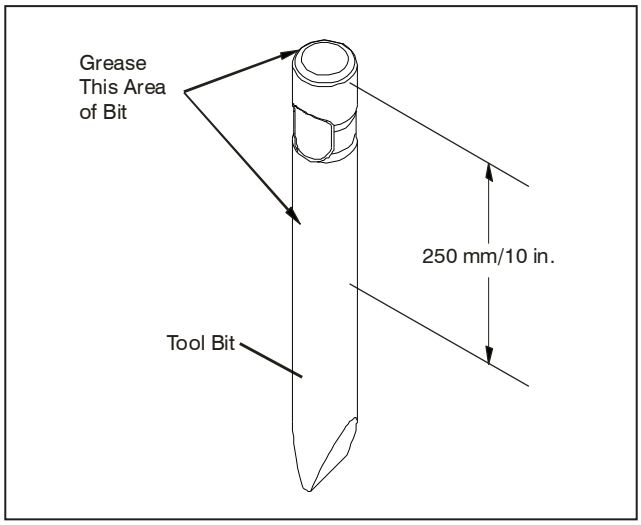

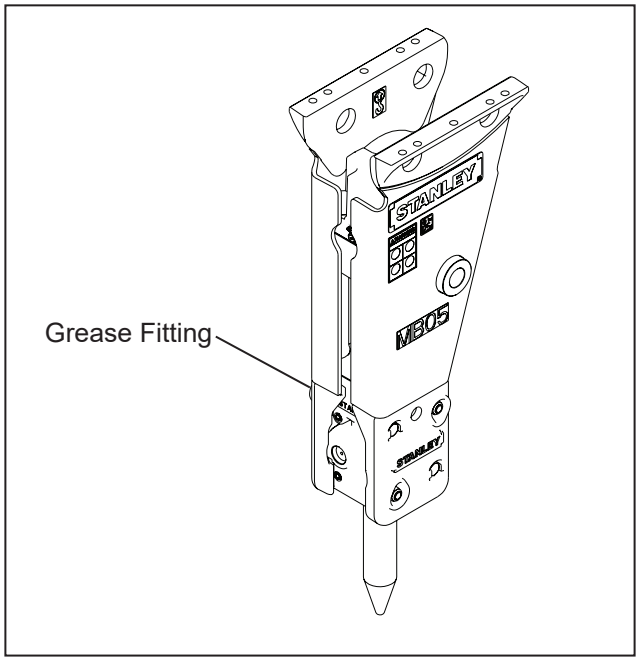

PRE-OPERATION PROCEDURES

NITROGEN CHARGE

The breaker has been properly charged with nitrogen at the factory and is ready to use.

TOOL BIT LUBRICATION

Grease the top 250 mm / 10 in. of the breaker tool bit before installing. During operation, the tool can be greased through the grease fitting. Grease is required.

Make sure the tool bit is against the piston by placing the tool bit against the ground and then putting down pressure on the breaker. See the illustrations.

⚠WARNING

Greasing the tool bit without down pressure on the breaker results in grease filling the space between the piston and the tool bit. When the breaker is next activated, the piston will strike the grease at a speed which will pressurize the grease resulting in seal and grease zerk failure.

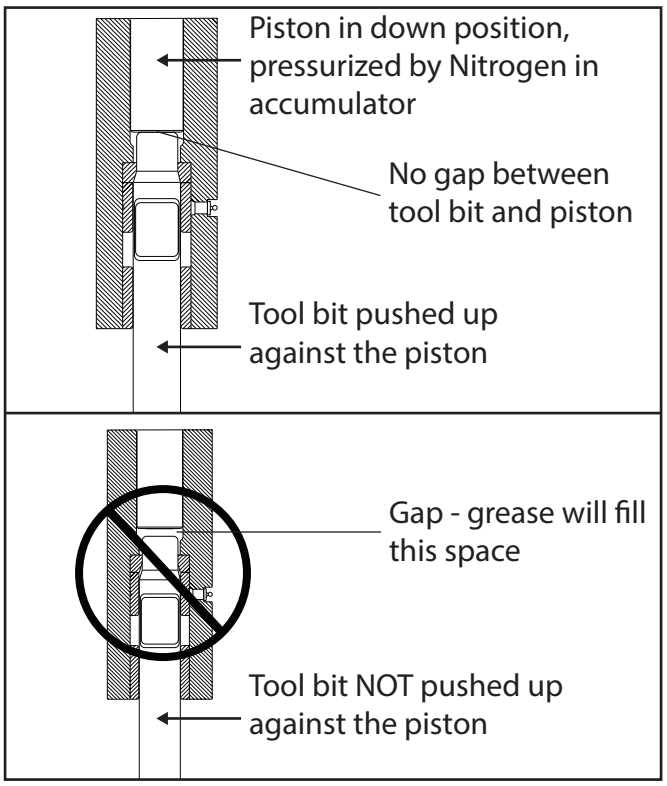

⚠WARNING

Always wear eye protection when installing or removing the tool retaining pin.

SECURING THE TOOL BIT

1. The tool retainer is shipped installed in the breaker.
2. Remove the stop pin and plug.
3. Drive out the tool retainer.
4. Grease the top area of the tool bit as shown in the illustration on page 10.
5. Install the tool bit making sure the notch is aligned with the lower body retainer pin holes.
6. Install the tool retainers.

LOWTEMPERATUREWARM-UPPROCEDURE

1. After starting the carrier, warm-up the hydraulic system at engine idle until hydraulic lines are warm to the touch.
2. With the carrier at idle and the breaker suspended in the air or with minimal down pressure, turn on the breaker to gradually warm up its internal components.
3. When the hydraulic system and breaker are warm, proceed with operation.

LONG TERM STORAGE

1. Remove the tool bit, clean the tool stop and the lower bushing. Thoroughly coat the surfaces of the tool stop and the lower bushing with grease.
2. If hoses are attached to the breaker, install plugs on the hose ends. If hoses are removed from the breaker, install plugs on the hose ends and install plugs in the breaker IN and OUT ports.
3. Store the breaker in a vertical position. Do not store the breaker horizontally for extended periods.

OPERATING THE BREAKER

PREPARATION FOR USE

Read the section in this manual titled Pre-Operation Procedures before operating a breaker. Failure to follow the preparation instructions can result in severe damage to the breaker and carrier and void the warranties of both.

POSITIONING THE CARRIER

BACKHOES

With the breaker tool in place on the material to be worked, position the backhoe so the boom is halfway up (45°) and the dipper holds the breaker almost vertical. Lower the loader bucket until the weight is off the front tires.

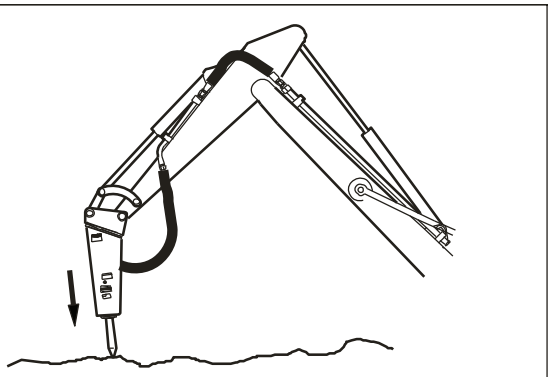

Apply down pressure.

Apply down force to the boom/dipper until the rear of the backhoe is raised off the ground. Rear tires and stabilizers should be off the ground so the total rear weight of the backhoe is on the breaker tool. The breaker is more efficient when adequate down force is applied.

EXCAVATORS

With the breaker tool in place on the material to be worked, position the excavator so the dipper is at approximately 45° and the breaker is almost vertical. The tracks of the excavator should be in line with the boom and the breaker.

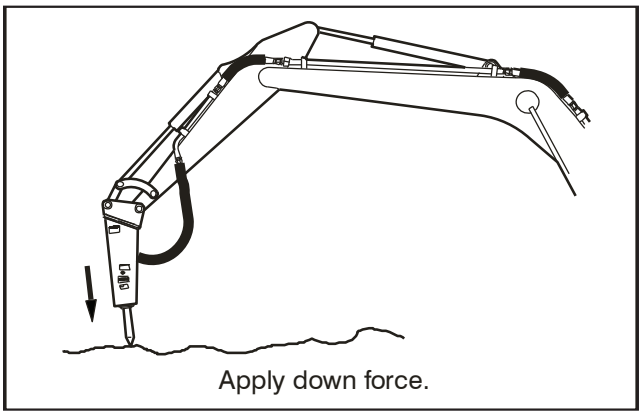

Apply down force.

POSITIONING THE BREAKER TOOL ON THE WORK MATERIAL

Position the tool bit near the edge of the work material, not in the center or far from the edge. Position the tool 6 – 18 inches (depending on the material) from the edge. Breaking off smaller pieces of rock or concrete usually accomplishes more than trying to break larger pieces.

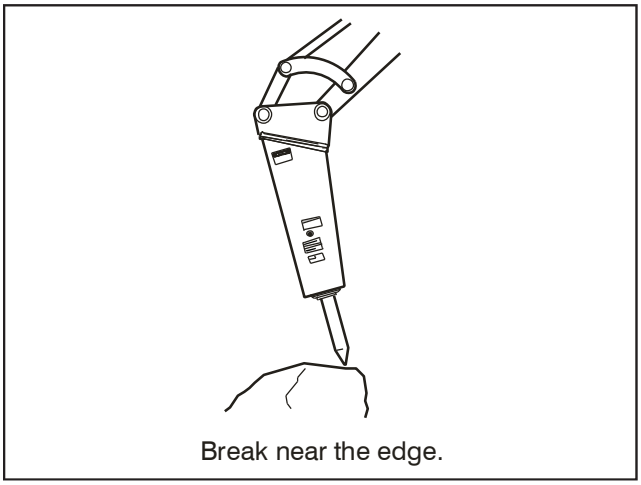

Break near the edge.

On flat material or rock, the breaker should be vertical or “curled” back slightly to direct the impact force downward and toward the backhoe. This directs the force back toward the edge of the work material. If the tool is positioned in the center of the work, or too far from the edge, the energy will be absorbed into the material without cracking it. Do not run the breaker longer than 15 – 20 seconds. If breakout does not occur within this time, move the breaker to another position.

On flat material such as concrete runways, starting to break in the middle of the material may cause vibrations to be transmitted throughout the breaker and excavator because the material has no place to break to. Always try to start at a point which will permit the material to break out.

MAINTAIN DOWN PRESSURE

Maintaining hard contact with the surface of the material to be broken in addition to maintaining adequate “down force” is very important. Always keep “down pressure” or “down force” on the point of the breaker by lifting the wheels, tracks or stabilizers slightly above the ground. This method takes the “slack” out of the bracket and boom pivots, and reduces the impact on the pivots in the boom.

The operator needs to be constantly aware of the amount of down pressure being applied and be able to adjust it if necessary. Not enough down pressure results in low production and accelerates wear and tear on the equipment. Too much down pressure may cause the breaker housing to violently crash into the broken material when “break-through” occurs.

In any breaking job, the operator should make every effort to “follow” the breaker with “down pressure” as the machine breaks farther into the material. The breaker should be stopped as soon as “break-through” occurs or if it is apparent that good solid blows are not occurring.

OPERATION

BREAKING

The operator should note the sound of the blow when the breaker is running. With experience, the operator will be able to tell the difference between a good solid blow and a hollow sounding blow. A hollow blow means that solid blows are not occurring and breaker should be repositioned.

Continuous tool penetration usually does not do much good. If the material does not break with 3 – 6 inches of tool penetration, it usually won't break with full penetration. The time used for additional penetration could be better used to strike blows in another place.

Many materials do not respond well to continued hammering in one place. The breaker tool should be repositioned on the work each time the tool penetrates but does not crack the material.

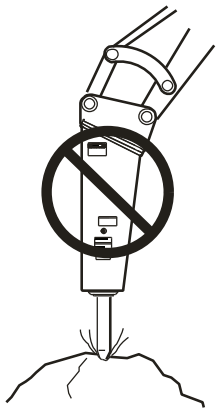

Do not break continuously in one place.

⚠ CAUTION

Continuous penetration in the same area for lengthy periods will create excessive temperatures at the tip of the tool bit resulting in loss of temper (hardness) of the bit, mushrooming of the tip of the bit and may lead to failure of the bit.

Use a "scoring" method of breaking when cracking the material becomes difficult. This technique involves striking the rock or concrete at several places along a line where you want the crack to occur. Most materials break sooner when struck several places along a line than when struck repeatedly in one location. On each line, the breaker tool should be continually repositioned. Practice determines the best length of time to stay in one spot. (15 – 20 seconds) and how far to move the breaker tool.

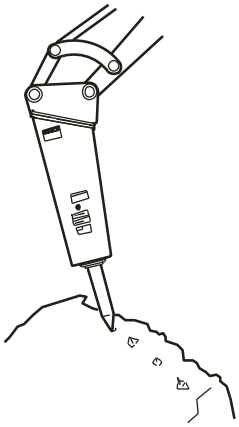

Scoring with the breaker

Breaker tool binding can cause erratic breaker operation and premature wear on the tool shank. Breaker tool binding is caused by failure to direct the down force in the direction of the tool bit.

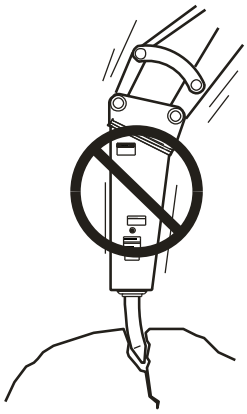

Breaker tool bit binding

⚠ CAUTION

Do not pry with bit and breaker. The tool bit may break causing injury.

Excessive side force cocks the tool in its bore, prevents proper movement and causes premature tool shank and bushing wear. Since the breaker tool bit must be pushed up into the breaker to operate, a binding tool prevents the breaker from operating correctly. Binding also causes the tool bit and tool bushings to seize and often results in breakage of one or more breaker components.

Always direct the down pressure force in a line toward the

point of tool contact with the work.

Moving rocks with the tool bit is another method of binding the tool bit. This practice should be avoided as it may cause tool bit failure.

Rebar reinforced concrete introduces the problem of concrete chunks being held together by the rebar after the concrete has been broken. The best approach to this problem is to use a chisel point tool which permits cutting the rebar with the breaker. Another method is to periodically cut the rebar with an oxy-acetylene torch

BLANK FIRING

To understand “Blank Firing”, the operator needs to be aware that the tool bit is able to drop down in the lower body cavity, far enough so that the piston cannot strike it, when the tool bit is not in contact with the work surface. “Blank Firing” occurs whenever the breaker is operating and the piston is not able to strike the tool bit solidly or not strike the tool bit at all. “Blank Firing” accelerates wear and tear on breaker and carrier components and may result in failure of one or more components. Excessive “Blank Firing” may be considered equipment abuse and may result in voiding warranties.

Break-through or difficult surface contact results in “Blank Firing” when the material being broken fractures and the tool bit is no longer in “hard contact” with the material but is still pushed high enough in the lower body cavity so that the piston can strike it. In this position, the piston strikes the tool bit and the tool bit, in turn, is driven against the retaining pins because it is not in sufficient contact with the material to be broken. The energy is absorbed by the retaining pins, other breaker components, and the carrier boom components. “Blank Firing” of this type can be experienced in trench work where obtaining striking contact with the work surface is difficult or the wrong tool bit is used, or in flat rock work where the operator fails to stop operation of the breaker when slippage, fracturing or material break-through occurs.

“Blank Firing” as a result of operator error occurs when the tool bit is not in contact with the work surface to be broken and is allowed to drop down in the lower body cavity so that the piston is not able to strike it. Instead, the downward movement of the piston will be stopped by an internal oil cushion located at the bottom of the piston’s stroke and the energy of the piston will be absorbed by breaker components and excavator boom components. “Blank Firing” of this type can be experienced when the operator fails to stop operation of the breaker when the material fractures or material break-through occurs, or during re-positioning of the breaker.

While “Blank Firing” cannot always be avoided, it can be kept to a minimum by avoiding the above conditions as much as possible.

UNDERWATER USAGE

Underwater usage of the breaker will cause damage to internal components. Even if the breaker is partially submerged, water is introduced to an area between the tool bit and piston. On the piston down cycle, the water becomes compressed and damages adjacent components.

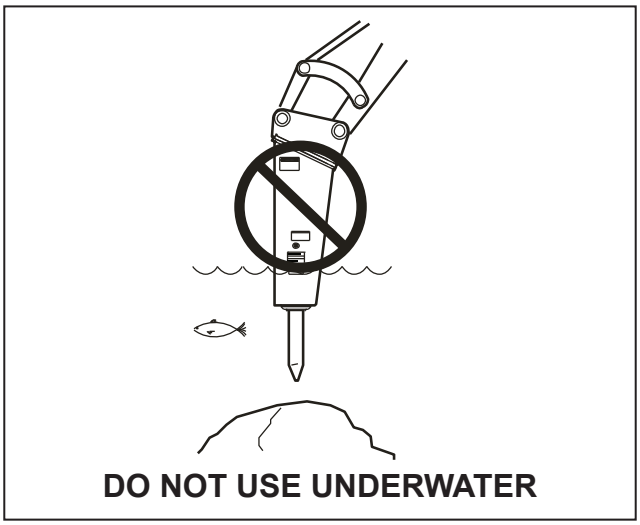

DO NOT USE UNDERWATER

⚠ CAUTION

No part of the breaker may be submerged in water.

Underwater usage of the breaker will cause internal damage to the breaker. Consult STANLEY for modifications and specific warranty coverage if you have an underwater requirement.

GREASE THE BIT

Grease should be applied to the upper end of the breaker tool bit each time it is installed. Thereafter, the tool should be greased at the fitting to reduce wear in the lower body and bushings of the tool. See “Tool Bit Lubrication” on page 9.

TROUBLESHOOTING

This section describes how to find and resolve problems users may experience. If a situation occurs that is not covered, call your STANLEY Customer Service Representative for assistance.

⚠WARNING

Inspecting the tool or installing parts with the hydraulic hoses connected can result in severe personal injury or equipment damage. To prevent accidental startup, disconnect the hydraulic power before beginning any inspection or installation task.

If symptoms of poor performance develop, the following chart can be used as a guide to correct the problem.

When diagnosing faults in operation of the tool, always check that the hydraulic power source is supplying the correct hydraulic flow and pressure to the tool as listed in the table below. Use a flow meter known to be accurate. Check the flow with the hydraulic oil temperature at least 80 °F/27 °C.

PROBLEM	CAUSE	SOLUTION
Breaker will not fire.	Low hydraulic oil level.	Fill reservoir.
	No flow to breaker.	Have hydraulic circuit tested by authorized dealer/distributor per approved procedure.
	Main relief set low.	
	Internal damage.	Have unit serviced by an authorized dealer/distributor.
	Damaged quick couplers.	Replace.
Breaker runs slowly.	Low hydraulic flow.	Have hydraulic circuit tested by an authorized dealer/distributor per approved procedure.
	Excessive heat build up.	
	Excessive nitrogen pressure.	Have unit serviced by an authorized dealer/distributor.
	Internal leakage.	
Breaker runs erratically.	Low or excessive back-pressure.	Have carrier serviced by an authorized dealer/distributor.
	Damaged switch or connection.	
	Relief set too low.	
	Internal damage.	
	Tool binding.	Add grease to tool shank. Do not pry while operating.
Breaker runs but at reduced power.	Low accumulator charge.	Have unit serviced by an authorized dealer/distributor.
	Excessive back-pressure.	
	Relief set too low.	
Breaker leaks oil around tool bit and tool bushing.	Lower seals failed.	Have unit serviced by an authorized dealer/distributor.
Hydraulic system overheats.	Main relief set low.	Have unit serviced by an authorized dealer/distributor.
	Insufficient cooling capability in hydraulic circuit.	
	Line/hose size too small.	
	Excessive back-pressure.	

DAILY MAINTENANCE CHECKS

Check for loose or missing fasteners. Tighten or replace as needed.

Inspect tool retaining pins and pockets for wear.

Check for hydraulic leaks at all fittings and hoses. Replace any defective hoses.

Apply grease to the grease fitting in the lower body each morning. Grease as needed throughout the work day.

TOOL STOP AND LOWER BUSHING

Inspect the tool stop and lower bushing for excessive galling and metal pickup on the tool bit. Also check for cracks. If cracks are present, the part must be replaced.

The extent of wear of the tool stop and lower bushings and the tool bit can be checked by moving a NEW tool bit back and forth and measuring the gap between the tool bit and the lower bushing. If the gap is more than .250 in./6 mm, the upper bushing, lower bushing and tool bit should be replaced. A gap in excess of .250 in./6 mm will cause damage to the piston. Do not just replace the tool bit or the lower bushing individually as this will result in premature wear of the replaced component. It is recommended to replace ALL worn components.

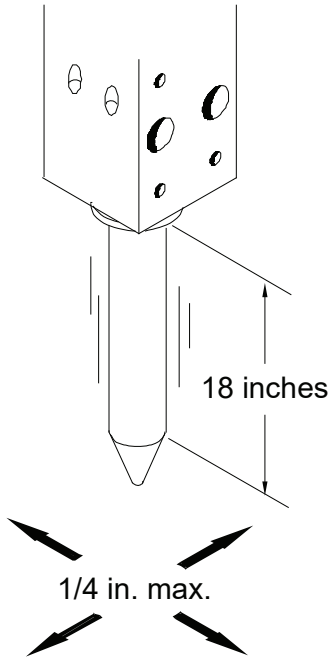

Move the tool bit back and forth and measure the gap between tool bit and lower bushing. (Use a new tool bit.)

CHARGING THE ACCUMULATOR

The tools required to charge the breaker accumulators are the 505232 charge hose assembly and the 28257 accumulator tester, which are used with other STANLEY breakers. When charging the accumulators, make sure the tools and charge valves are clean. Dirt can contaminate the charge valves and cause leakage.

1. Remove the protective plug from the accumulator charge valve.

Note: There is one accumulator on this breaker; the upper accumulator.

2. Hold the chuck end of the tester and turn the gauge fully counter clockwise to ensure the plunger inside the chuck is completely retracted.
3. Screw the tester into the breaker charge valve by turning the chuck. Do not use the gauge for turning as this will advance the plunger in the chuck. Tighten the chuck lightly against the breaker charge valve.
4. Turn the gauge clockwise to advance the plunger until a pressure is indicated on the gauge. Do not overtighten.
5. If the pressure is correct, unscrew the gauge to retract the plunger. Then, loosen and remove the tester from the charge valve. If the pressure is not correct, proceed to the next step.

Note: When disengaging the tester a "POP" of nitrogen is normal.

6. Connect the charge hose assembly to the charging valve on the tester. Make sure the valve on the charge hose assembly is closed. Open the valve on the nitrogen bottle.
7. Very slowly open the valve on the charge hose assembly and slowly meter the nitrogen into the breaker charge valve until the tester reads the correct charge pressure (200 psi).
8. When the correct pressure is obtained, close the valve on the charge hose assembly and on the nitrogen bottle. Unscrew the gauge to retract the plunger. Loosen and remove the tester from the charge valve. Before replacing the protective plug, inspect the plug O-ring. If damaged or deformed, replace the plug. Apply Loctite™ 242 to plug and cap.

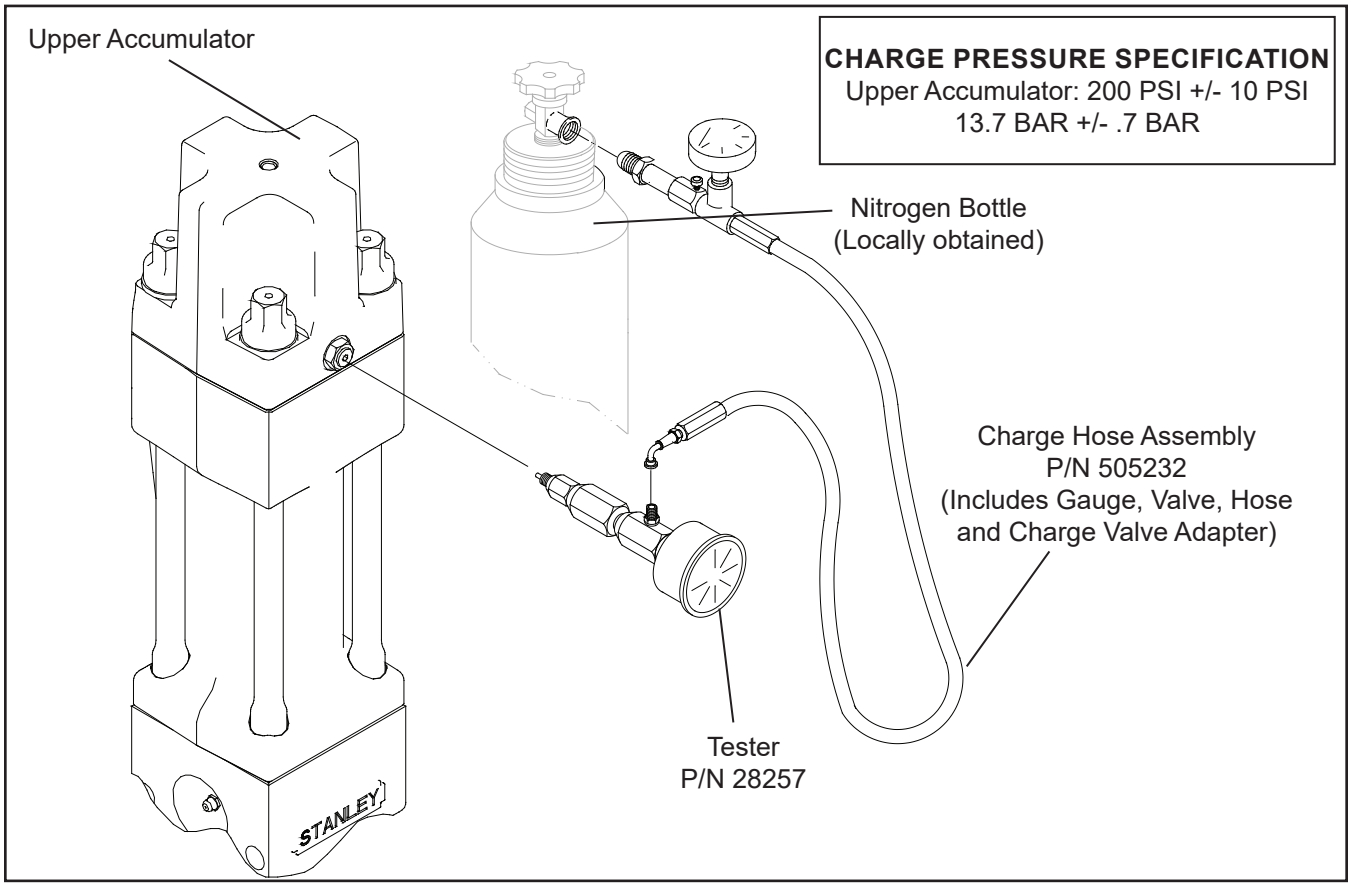

WEAR TOLERANCES

NEW	REJECT LIMIT
LOWER BUSHING (Item 32)	
2.650 in. / 67.3 mm	2.760 in. / 70.1 mm
TOOL STOP (Item 31)	
A) 2.650 in. / 67.3 mm Inside Diameter	A) 2.760 in. / 70.1 mm Inside Diameter
B) .400 in. / 10.1 mm Depth	B) .280 in. / 7.1 mm Depth
RETAINER PIN (Item 35)	
1.595 in. / 40.5 mm Outside Diameter	1.510 in. / 38.3 mm Outside Diameter
PISTON (Item 18)	
.450 in. / 11.4 mm Depth	.410 in. / 10.4 mm

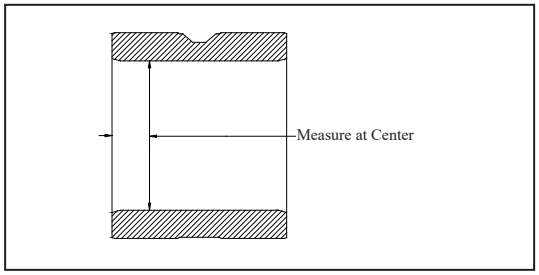

LOWER BUSHING

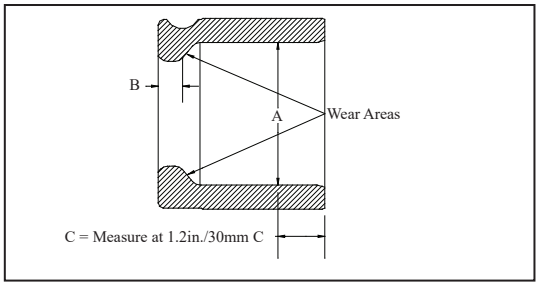

TOOL STOP

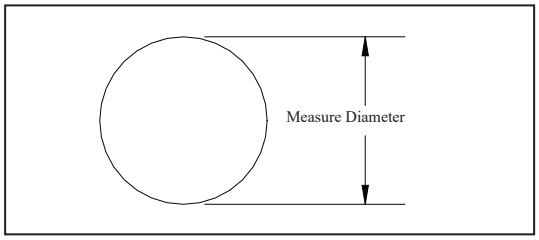

RETAINER PIN

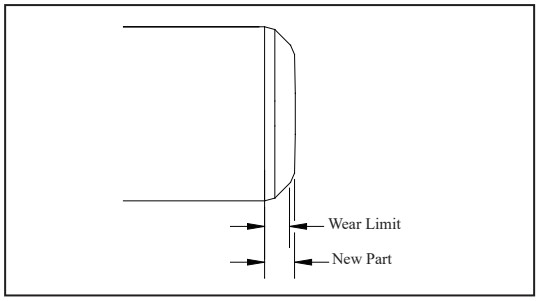

PISTON

IMPORTANT

LOWER BUSHING

To increase the life of the lower bushing, remove the bushing after normal wear has developed and rotate the bushing 90° and lock into the second slot. Normal wear on the bushing is usually found from front to back, by rotating the bushing 90° will add additional life to the bushing. In addition to rotating the bushing, it is also symmetrical and can be flipped end to end and again rotated 90° resulting in even longer life.

TOOL STOP

To increase the life of the tool stop, remove the tool stop after normal wear has developed and rotate the tool stop 90° and lock into the second slot. Note: the tool stop is **not** symmetrical and can **not** be flipped from end to end.

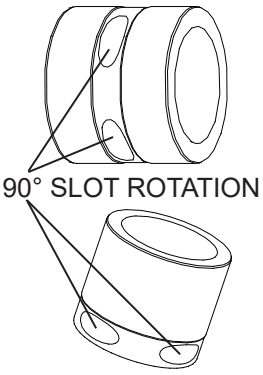
90° SLOT ROTATION

PROPER CARE OF TOOL BITS

Tool bits are made and heat treated to specification.

Tool bits are wear parts, and are used in the most destructive applications. Even when the hydraulic breaker is used properly a tool bit may become damaged. When a tool bit has been damaged, it is useful to determine the cause immediately in order to prevent the damage from occurring again.

All STANLEY tool bits are machined and hardened for maximum performance. Care must be taken to maintain the tools original condition for optimum productivity and life expectancy. It is not uncommon for an operator who is unfamiliar with using a hammer to break a point. This is part of the learning experience.

Listed below are several methods to determine tool failure and will quickly aid in warranty determination.

TOOL FAILURE NOT COVERED UNDER WARRANTY

BLANK FIRING OR FREE RUNNING

This occurs when the tool is not in proper contact with the work, thus causing the energy produced by the hammer to be concentrated on the tool retainers and the retainer slots on the tool itself. Caution should be used to prevent the hammer from sliding off slanted surfaces or when breaking through thin material.

The illustration below is typical of the kind of breakage that occurs from excessive blank firing.

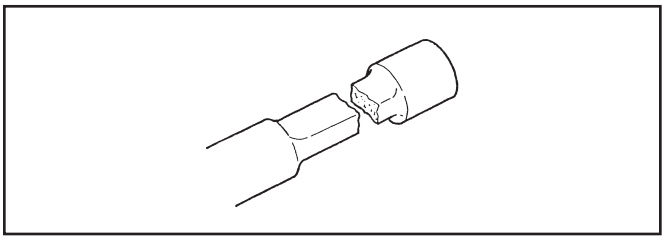

WORN-OUT FRONT BUSHINGS OR RETAINER PINS

Worn-out front bushings will cause the tool to become misaligned inside the hammer. This misalignment will cause uneven contact between the piston and tool, thus causing stress to concentrate on one particular area of the tool. This can also cause the tool to bind inside the hammer. Call your dealer for acceptable wear allowances.

Worn-out retainer pins will cause uneven loading on the pins themselves, causing failure of the tool or retainer pins. This will also cause excessive wear to the front bushings.

METAL-TO-METAL CONTACT

Extreme caution should be used to avoid scratches or gouges on the surface of the tool. These areas create a stress concentration metal-to-metal contact point, thus weakening the tool.

Another form of metal-to-metal contact is galling, which usually occurs from the lack of lubrication. Special care should be taken to keep the tool shank lubricated every two (2) to three (3) hours.

Steel failures that were caused by surface damage take two main forms. The simplest form is caused by deep scratches on working steel surface. The broken surface has a shell pattern around the starting point of failure, similar to the one in the fatigue failure. The other parts of the broken surface are brittle. These failures work slowly through the steel until it suddenly parts completely.

The second form of failure caused by surface damage occurs when there are deep scratches on working steel surface and there was also excessive bending stress. The broken surface also shows the shell pattern, but the other parts of the broken surface are brittle and usually have a “lip” like that in a stress failure.

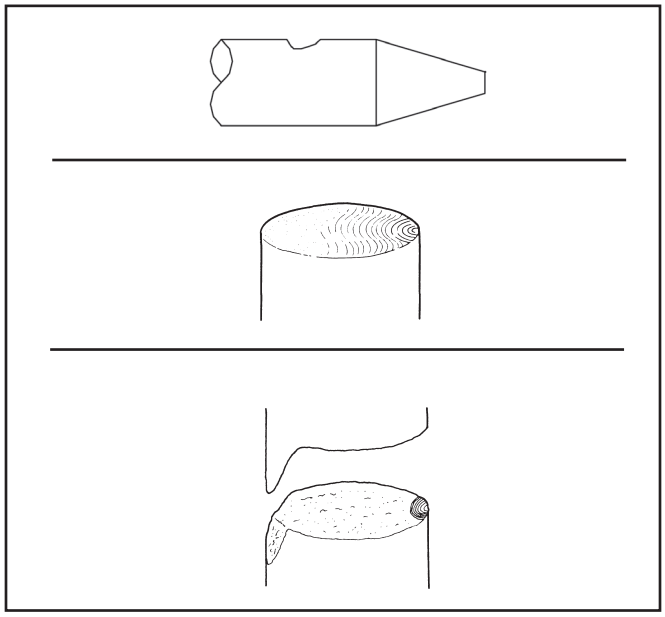

In its most extreme forms, the combination of surface damage and severe bending can quickly break even the best working steels.

The illustrations below show examples of severe stress breaks.

PROPER CARE OF TOOL BITS

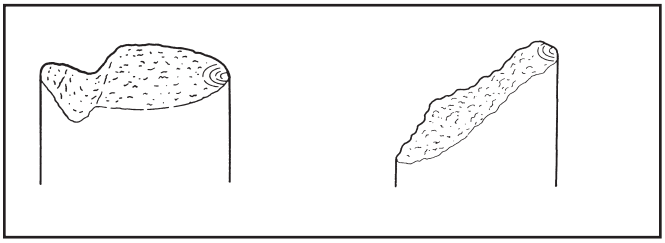

PRYING

This is the most common cause of tool failure. Even when there is no surface damage, the stress from prying can easily break a working steel. This kind of failure generally results from any type of side pressure such as an incorrect breaking angle or from using the tool to reposition material. The tool should not be used as a pivot point when repositioning the carrier. The power generated by the carrier will far exceed the strength of the tool.

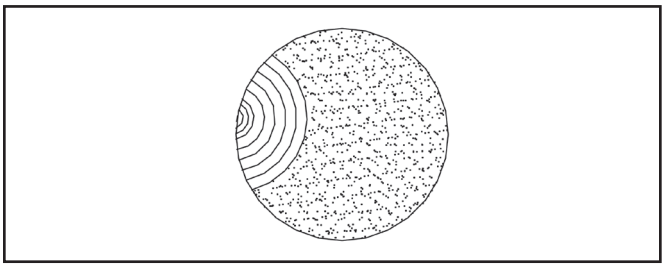

Similar failures can also occur when the steel is used with extreme down pressure, and the steel repeatedly slips off the work at an angle, or the material, itself moves from under the working steel.

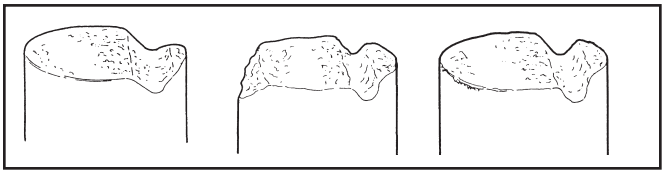

As the next illustration shows, fatigue failures take many forms, but they all exhibit similar features. Generally, the broken surface is brittle and has a “lip” like that in the bending failure, even though, in some cases, the lip has been broken.

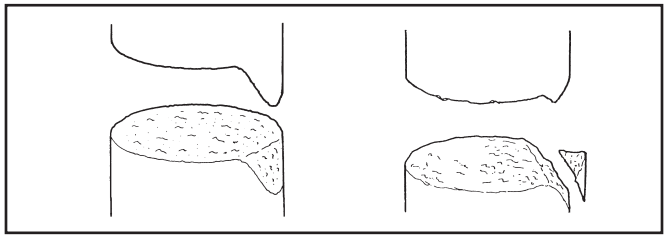

CORROSION

Tools should be greased and stored out of the weather. Corrosion tends to accelerate the fatigue fractures of the tool.

MUSHROOMING

Driving the tool into a hard material for a long period of time generates an intense heat, indicated by a blue tone just above the point. This will soften the steel and cause the point to fold over or mushroom the end of the tool. Avoid hammering in one location for too long. If material does not break after a short period (approximately 15 to 20 seconds), reposition the tool.

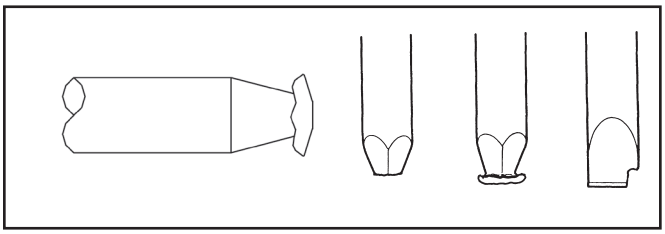

If the overheated steel is suddenly cooled by being dipped in standing water, for example, the metal will harden and become brittle. These are some examples of failure caused by temper changes occurring on the job.

TOOL FAILURE COVERED UNDER WARRANTY

INTERNAL MATERIAL FLAW

This failure occurs when a foreign material is rolled into the steel during the manufacturing process, causing an imperfection in the internal material flaw grain. The result is an inherent weakness in the tool shank and eventual breakage.

The fatigue failure is started by the defects within the tool bit. The broken surface exhibits a shell pattern around the starting point of failure, like that in the fatigue failure. The other parts of the broken surface are brittle.

This is the only kind of tool bit failure that is always covered under warranty.

PROPER CARE OF TOOL BITS

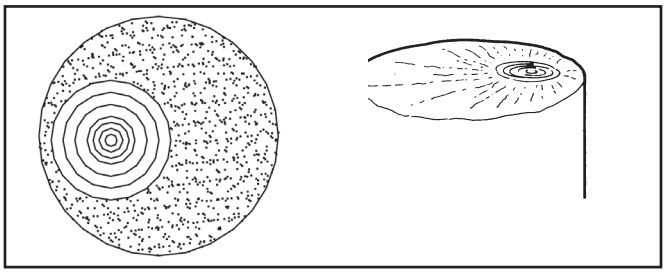

As a rule, working steel failures can be diagnosed by looking at the break itself, and at the place on the steel where the break occurred. Discoloration, like “rainbow” effects or blue bands, is the result of extreme heat.

Look for surface cracks, galling or gouge marks. Breaks that start as surface damage have a “sea shell” pattern, with the damaged spot at the center. A large “sea shell” indicates a slow growing break; a small one indicates one compounded by side stress.

Stress failures start small, and spread into the center of the steel. In a stress failure, the coarser the grain, the greater the stress was, and the more rapid was the failure.

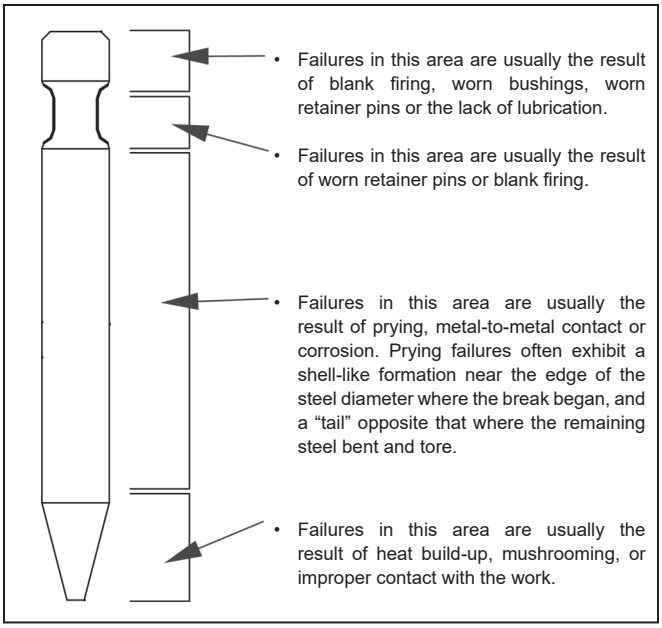

PROPER CARE OF TOOL BITS

STANLEY Breakers are available with several different types of tool bits. The most common are the moil, chisel and the blunt. Each of these working steels has its own purpose as described below:

To obtain the maximum production from the breaker, it is important to select the proper working steel. Consult your STANLEY representative for assistance in selecting the proper working steel for your application.

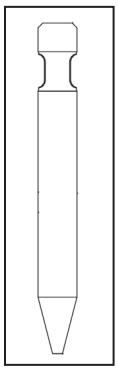

MOIL

This is by far the most popular working steel. It is a general purpose point used to break anything from concrete to hard rock. Its pencil-type point is used to fracture the material. The tool is best where penetration speed is important.

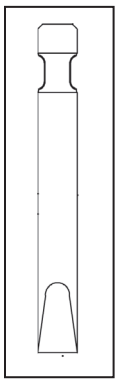

CHISEL

This style of point is used generally used for trench work, where a controlled break is required, and for rock breaking on materials with a definite line of cleavage. A chisel bit also works well in softer concretes where a moil might penetrate quickly, but not cause a fracture line.

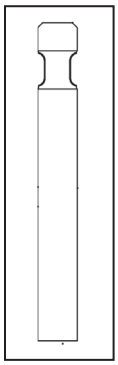

BLUNT

This flat type of point is used to break softer material such as coal or shale. A moil or chisel will tend to punch holes in this type of material, where a flat blunt will shatter the material. It is also useful when breaking irregularly shaped material where its broad tip makes it easier to position.

FLOW TEST PROCEDURES

The correct performance of this procedure will verify if the auxiliary circuit of the carrier is adequate to properly operate a STANLEY attachment.

This procedure is generic in form. It is the end users responsibility to ensure that this procedure will work with his specific type of equipment.

If an adequate flow meter is not available contact your STANLEY Distributor for assistance.

TEST PROCEDURE

1. With the auxiliary circuit (or kit) completely installed connect the flow meter between the tool inlet and outlet hoses.

Note: Always use the hoses that are supplied for the attachment and make sure the machine hydraulic oil is between 90 to 120 °F. This will assure correct readings and adjustments.

2. With the machine setting at the mode that's going to be used to operate the attachment record the GPM _____.

   Locate the correct flow for the attachment in the manual under the specification section. Adjust the machine to the correct GPM.

Note: If possible, always set the machine to the highest GPM output mode. This will prevent the operator from over flowing the attachments.

3. Once the correct GPM flow is achieved fully open the restrictor on the flow meter.
4. With the machine in the attachment mode set in step 2 record the back-pressure. At this point the pressure reading on the pressure gauge is the back-pressure in the circuit. This pressure must not exceed 200 psi/13.5 bar.

   Excessive back-pressure will slow the attachments operation and lead to premature seal failures and over heating.

Record the back-pressure _____ psi.

5. Close the restrictor valve on the flow meter until the attachment relief starts to crack or open. The relief valve opens when the flow rate (GPM), indicated on the flow meter begins to decline rapidly. Locate the tools operating system relief pressure in the specification section in the manual. Adjust attachment relief to specification.

Note: The relief valve pressure must be greater than the operating pressure of the attachment and three times the back-pressure. Never use the relief valve to control the flow rate in the circuit. Cracking pressure means the loss of 4 or more GPM.

Record the relief cracking pressure _____ psi.

Example:

Operation pressure of a breaker is 2700 psi. Back-pressure is 150 psi. A good rule to follow when setting the relief, multiply the back pressure by 3 then add this number to the operation pressure of the attachment.

Operating Pressure	2700 psi
Back-pressure	450 psi
Operating pressure of the tool	3150 psi

The relief valve setting must be greater than the estimated operating pressure of the tool. If the setting is lower, damage to the circuit may occur. Excess heat will be generated in the circuit which will damage the attachment and carrier.

HEAT LOAD TEST

With the installation kit properly installed and adjusted per the above procedure, conduct the heat load test as follows.

1. Connect the flow meter between the tool inlet and outlet hoses.
2. With the carrier set in the attachment mode, restrict the flow meter until a pressure of 1000 psi is achieved. This pressure must be maintained throughout the heat test.

Note: Closing of the restrictor may be required as the temperature increases.

Monitor the oil temperature from the flow meter until no change is noted. Record the time required for oil to stabilize. Record the surrounding temperature (ambient temperature). Record the time required to stabilize _____ minutes.

Record the stabilized oil temperature _____ °F.

Record the ambient temperature _____ °F.

The "heat rise" is calculated as the stabilized temperature minus the ambient temperature.

Example:

Stabilized Temperature	160°
Ambient Temperature	-80°
Heat Rise	80°

The normal operating temperature range of this circuit will be the typical ambient temperature range for the geographical area plus the heat rise calculated above. Ensure that the operating temperature range is lower than 180° for optimum operation of the attachment.

TROUBLESHOOTING

If adequate pump flow is available from the carrier pumps but is not getting to the attachment, consult your service representative and review the following:

1. Attachment valves are not actuating. Review all electrical

connections that are part of the attachment kit.

2. Ensure proper voltage to the valves.
3. Ensure the REG port of the valve is not blocked.
4. Check to make sure the carriers main relief is set to the manufacturers recommendation and that this value is equal or greater than the attachment circuit relief.
5. If the valve will not turn off, check the drain (tank) line of the valve to ensure that the pressure is 50 psi or less.

DEFINITION OF TERMS

Tool: The hydraulic attachment which the auxiliary circuit is intended to power. These may include hydraulic breakers, compactors, shears, etc.

Operating Pressure: That pressure at which the tool will naturally operate without influence of outside pressure relief mechanisms. This pressure is an operating characteristic of the tool and cannot be altered by the end user without changing the tool design.

Relief Pressure: The relief pressure is that pressure at which the circuit will dump fluid in order to protect itself from damage.

Back Pressure: The pressure at the tool's connection to the return circuit of the carrier.

Flow Meter: Instrument for testing the operating characteristics of a hydraulic circuit. The data usually available from this device are pressure (psi/bar), flow (GPM/LPM) and temperature (°F/°C).

Restrictor Valve: A valve on the flow meter which allows the user to simulate an operating tool by adding a pressure load (through restriction) to the circuit. This feature is used to evaluate relief settings and flow ratings at pressure.

V60/V65/V100 Valves: A priority flow control valve manufactured by STANLEY. Allows for optimum operation of any attachment by providing the proper amount of flow for operation of the tool the "priority" aspect allows the attachment to function properly if another control function is activated.

Inlet Flow: The hydraulic oil supplied to the "IN" port of the tool or valve.

Regulated Flow: The flow of oil supplied to the tool by the V60/V100 valve.

By-Pass Flow: The oil flow that is supplied by the carriers pump, but not used in the operation of the attachment. By-pass flow equals inlet flow (to the valve) minus the regulated flow.

Pressure Line: The hydraulic lines which supply pressurized oil from the pump to the valve or tool.

Return Line: The hydraulic line which connects the "OUT" port of the tool to the tank circuit of the carrier.

Cracking Pressure: The pressure at which the relief valve starts to open. Can be seen by a drop in the flow rate as shown by the flow meter.

Full Open Pressure: The pressure at which the relief valve is completely open dumping all system flow to the tank.

Ambient Air Temperature: The temperature of the outside air.

Stabilized Temperature: The temperature at which the carrier hydraulic system temperature will stop rising during testing or operation.

SPECIFICATIONS

Impact Energy Class	ft-lbs J	500 680
Blows Per Minute	bpm	650 – 1550
Flow Range	GPM LPM	10 – 22 38 – 83
Hydraulic Operating Pressure	psi bar	1500 – 2000 100 – 140
System Relief Pressure (min. cracking)	psi bar	3000 206
Oil Temperature (Max)	°F °C	190 88
Hose Diameter (min)	inch mm	3/4 19
Adapter fitting size and type		Male JIC 37° Flare 1-1/16x12 UNF
Weight Skid Steer (with Tool)	lbs kg	810 368
Weight Excavator (with Tool)	lbs kg	480 218

Length Excavator (with Tool)	inch mm	53 1350
Tool Diameter	inch mm	2.6 67
Tool Working Length	inch mm	15 381
Main Accumulator Charge Pressure	psi bar	200 +/- 10 13.8 +/- 0.7
Sound Power Level (LW)	dBA	126
Carrier Size – Skid steer	lbs kg	4500 – 7000 2045 – 3182
Carrier Size- Mini-Excavator	lbs kg	5000 – 13500 2273 – 6075
Carrier Size – Backhoe	lbs kg	5000 – 13500 2273 – 6075

TORQUE TABLE					
Item No.	**Illustration**	**Description**	**Apply**	**Ft/Lb**	**Nm**
16	Power Cell	Charge Valve	Loctite™ 242		
40	Power Cell	Hollow Hex Plug -12 SAE	Loctite™ 242		
* 37	Power Cell	Tie Rod	Kopr Kote™	500	678
** 8	Power Cell	Washer	Kopr Kote™	N/A	N/A
25	Power Cell	Valve Cap	Kopr Kote™		
39	Power Cell	Plug	Kopr Kote ™		
2	Housing	Nut	Kopr Kote™	280	379
31	Cradle	Nut	Kopr Kote™	60	81

* Tighten in a cross pattern and thread tie rod into lower body by hand, use Kopr Kote™ anti-seize on tie rod threads and the underside of the tie rod flange.

** Coat both sides or ID/OD with Kopr Kote™ anti-seize.

Use Loctite™ to prevent plug from falling out. If plug falls out, the housing will fill with grease. The power cell must be removed to repair.

Note: Weights, dimensions and operating specifications listed on this sheet are subject to change without notice. Where specifications are critical to your application, please consult the dealer.

ACCESSORIES

DESCRIPTION	PART NO.
TOOL BITS	
Conical	69863
Chisel, Cross Cut	69864
Chisel, Line Cut	69865
Blunt	69866
Tamping Pad	69867
Cross Cut Asphalt	72911
Line Cut Asphalt	72912

MISCELLANEOUS

Attaching Kits	Consult Dealer
Charge Hose Assy (Incl Valve and Hose for Nitrogen Tank & Charge Valve Connections)	505232
Charge Kit Assembly (Includes p/n 505232, 28257 and 372047 Charge Kit Box)	34892
Accumulator Tester	28257
Service Kit (For Rebuild MB556, 656, 856, 956, 10	40373

SERVICE TOOLS

MB05 Service Tool Kit	72742

Service Kit Includes the following: 72574 Valve Sleeve Puller Kit, 29565 Piston Sleeve Removal Tool, 72587 Valve Sleeve Cap Puller and Capscrew 32412.

BASE PLATE BOLT PATTERN

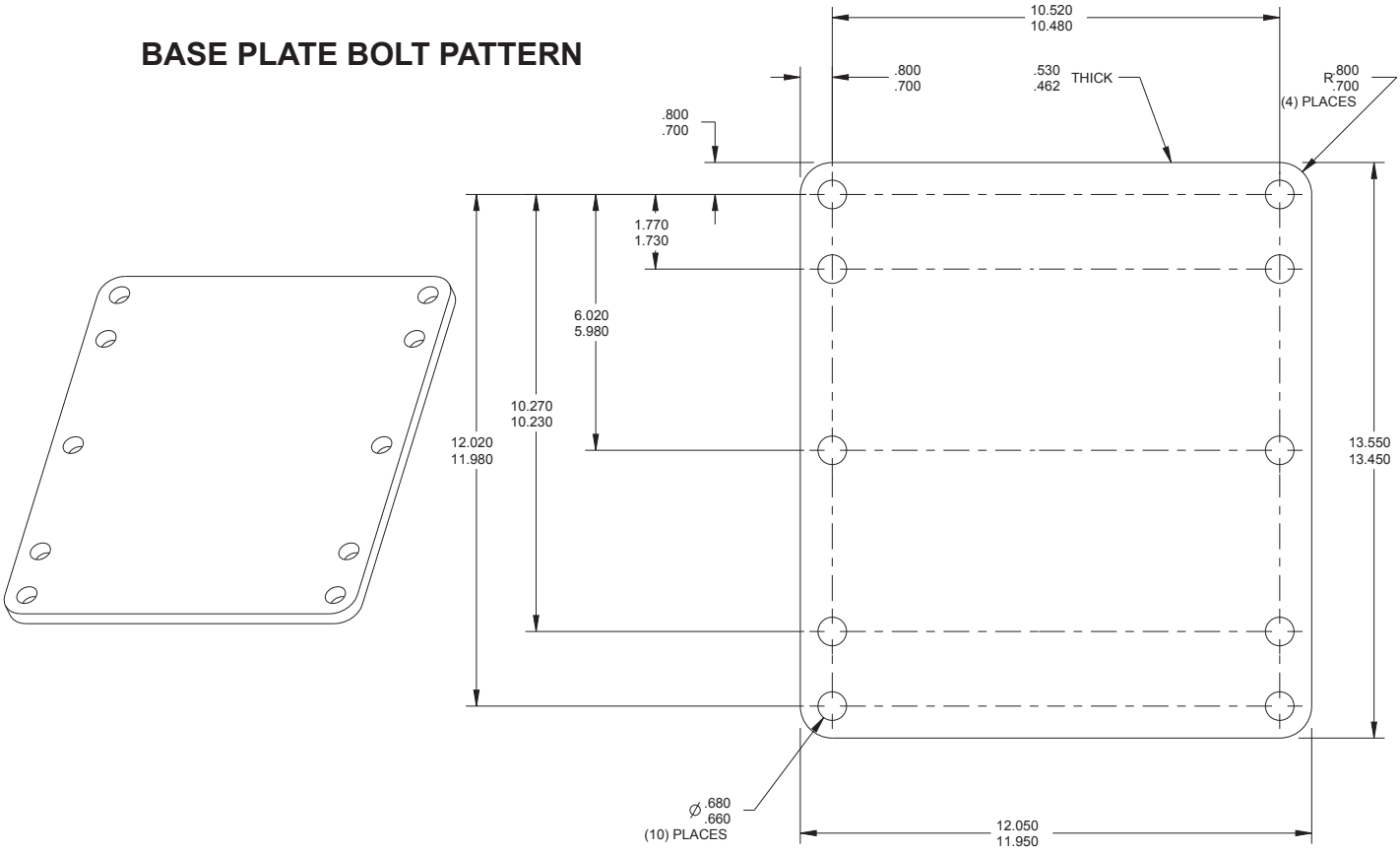

STANLEY

MB05 POWER CELL ILLUSTRATION

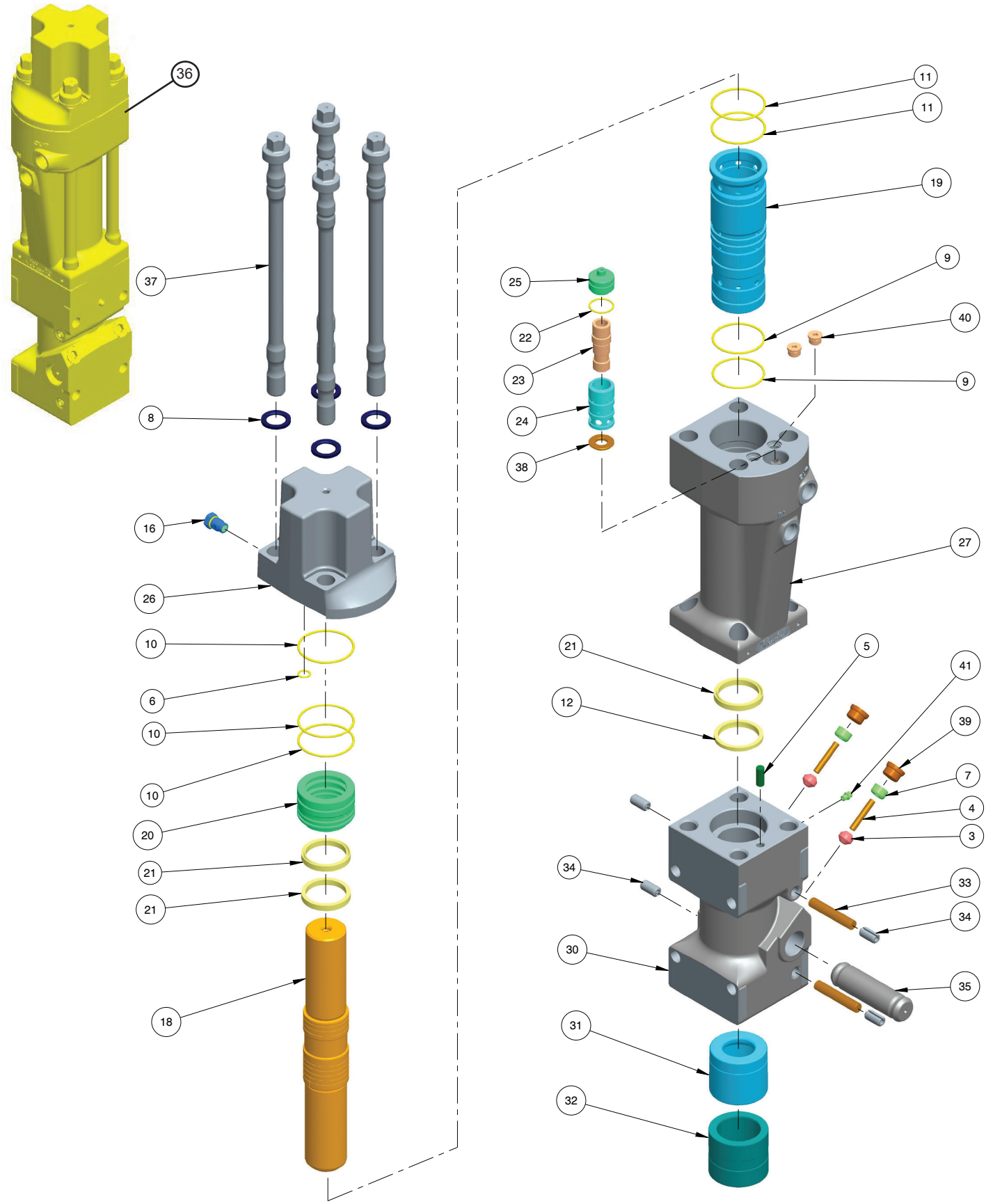

MB05 POWER CELL PARTS LIST

ITEM	P/N	QTY	DESCRIPTION
3	09728	2	PIN RETAINER SPRING
4	09764	2	PIN RETAINER
5	16549	1	DOWEL PIN
6	19095	1	O-RING •
7	22980	2	RETAINER SPRING
8	22993	4	TIE ROD WASHER
9	22998	2	O-RING •
10	24112	3	O-RING •
11	24117	2	O-RING •
12	25008	1	ROD WIPER •
16	74685	1	CHARGE VALVE ASSY
18	69839	1	PISTON
19	69840	1	PISTON SLEEVE
20	69841	1	SEAL CARRIER
21	69843	3	ROD SEAL •
22	69844	1	O-RING •
23	69846	1	VALVE SPOOL
24	76493	1	VALVE SLEEVE (S/N 071718040 AND ABOVE)
	69847	1	VALVE SLEEVE (S/N 071718039 AND LOWER)
25	69849	1	VALVE CAP
26	69850	1	UPPER ACCUMULATOR
27	69852	1	MAIN BODY ASSY (INCL ITEMS 12, 21, 24, 38 & 40)
30	69855	1	LOWER BODY ASSY (INCL ITEMS 3, 4, 7, 31-34, 39, 41)
31	69858	1	BUSHING - TOOL STOP
32	69859	1	BUSHING - LOWER TOOL
33	69860	2	DOWEL PIN
34	69861	4	ROLL PIN
35	69862	1	RETAINER PIN - TOOL
36	69869	1	POWER CELL
37	69879	4	TIE ROD
38	71094	1	VALVE STRIKE PLATE
39	350223	2	HOLLOW HEX PLUG
40	350237	2	HOLLOW HEX PLUG
41	372003	1	GREASE FITTING

SEAL KIT
70984

• DESIGNATES PARTS INCLUDED IN SEAL KIT

STANLEY

MB05 HOUSING PARTS

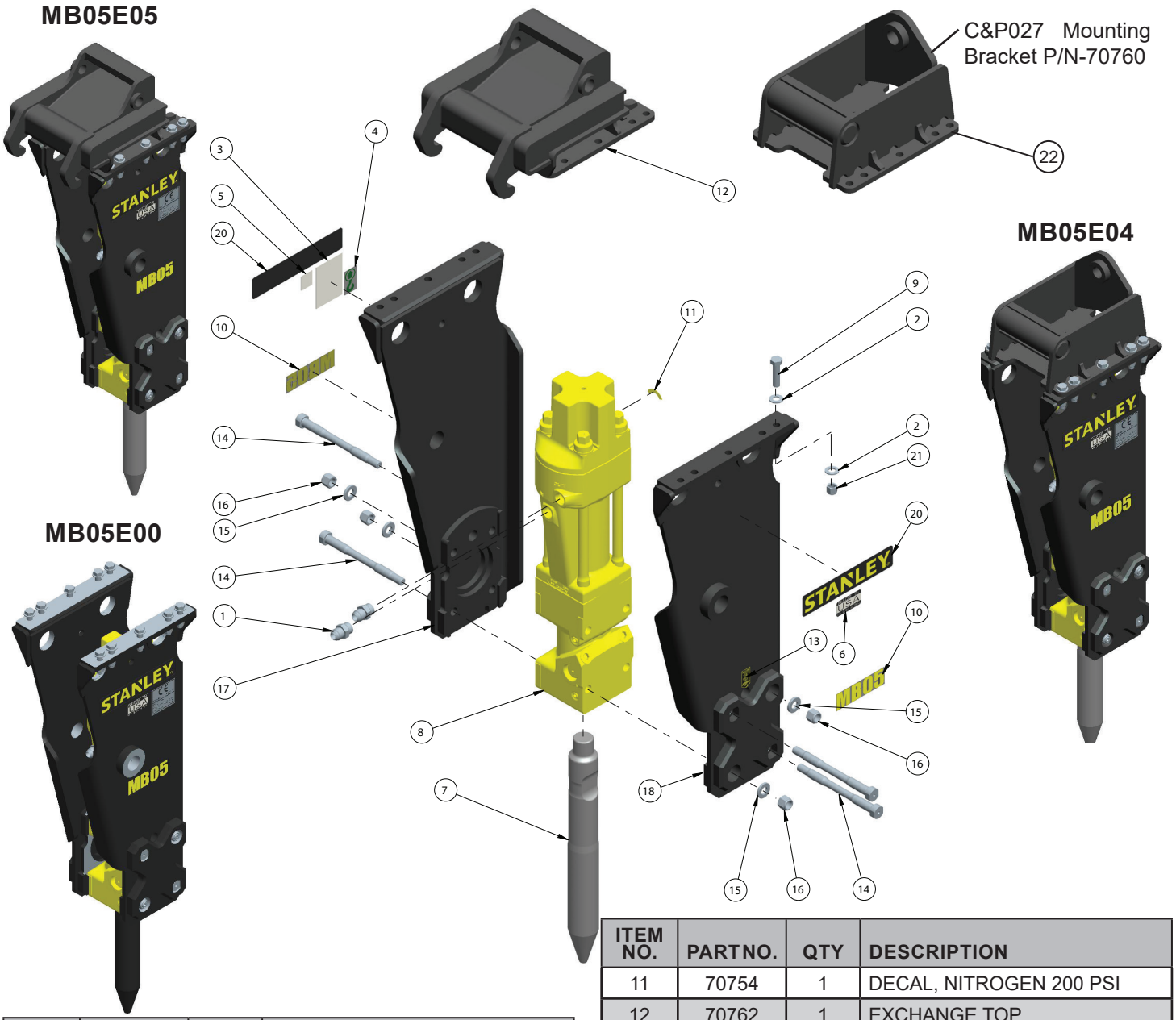

ITEM NO.	PART NO.	QTY	DESCRIPTION
1	02773	2	ADAPTER 12 F50X
2	20876	20	WASHER 5/8" I.D.
3	47351	1	DECAL, COMPOSITE WARNING
4	47352	2	DECAL, LIFT POINT
5	66218	1	SOUND POWER LEVEL
6	66764	1	DECAL, USA ORIGIN 3"
7	69863	1	TOOL BIT, CONICAL
8	69869	1	POWER CELL
9	81114	10	HHCS 5/8-11UNC X 2.500
	81114	10	HHCS 5/8-11UNJC X 2.250 (MB05E05)
10	70753	2	DECAL, "MB05"

ITEM NO.	PART NO.	QTY	DESCRIPTION
11	70754	1	DECAL, NITROGEN 200 PSI
12	70762	1	EXCHANGE TOP
13	70972	1	DECAL, GREASE
14	71457	4	SIDE PLATE BOLT
15	71458	4	WASHER
16	72499	4	NYLOCK NUT 3/4-16UNF
17	74405	1	SIDE PLATE, LEFT
18	74406	1	SIDE PLATE, RIGHT
20	74705	2	DECAL, "STANLEY" 11 INCH
21	371507	10	NYLOCK NUT 5/8-11UNC
22	70760	1	C&P027 MOUNTING BRKT

MB05S02 SKID STEER MOUNTING BRKT

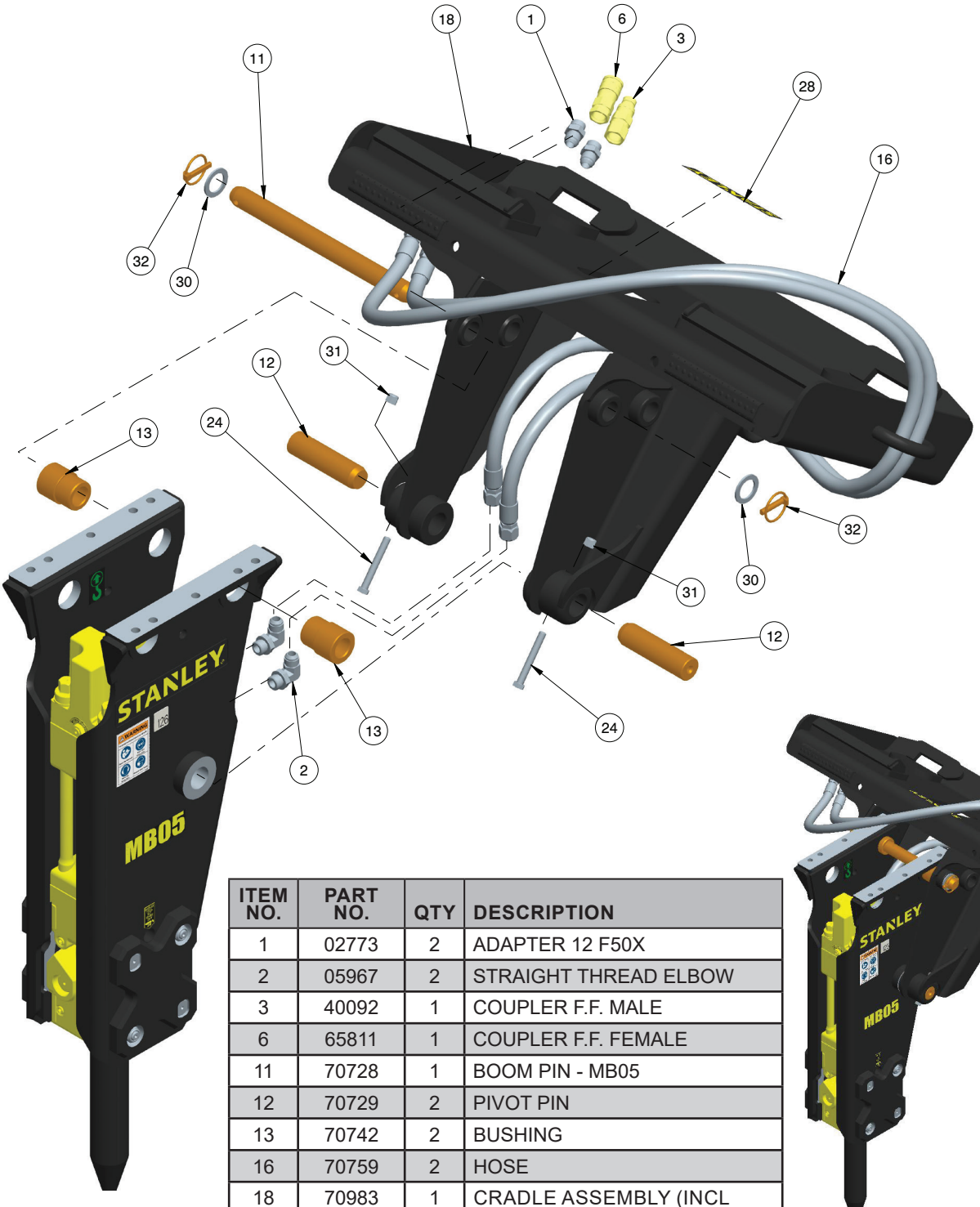

MB05S02

ITEM NO.	PART NO.	QTY	DESCRIPTION
1	02773	2	ADAPTER 12 F50X
2	05967	2	STRAIGHT THREAD ELBOW
3	40092	1	COUPLER F.F. MALE
6	65811	1	COUPLER F.F. FEMALE
11	70728	1	BOOM PIN - MB05
12	70729	2	PIVOT PIN
13	70742	2	BUSHING
16	70759	2	HOSE
18	70983	1	CRADLE ASSEMBLY (INCL ITEMS 11, 12, 13, 24, 30, 31, 32.
24	70911	2	CAPSCREW 4 INCH LONG
28	74707	1	DECAL, "STANLEY", 8.5 INCH
30	371054	2	WASHER 1-1/2
31	371500	2	NYLOCK NUT 1/2-13UNC
32	372089	2	LYNCH PIN

STANLEY

MB05S04 C&P027 TOP SKID STEER

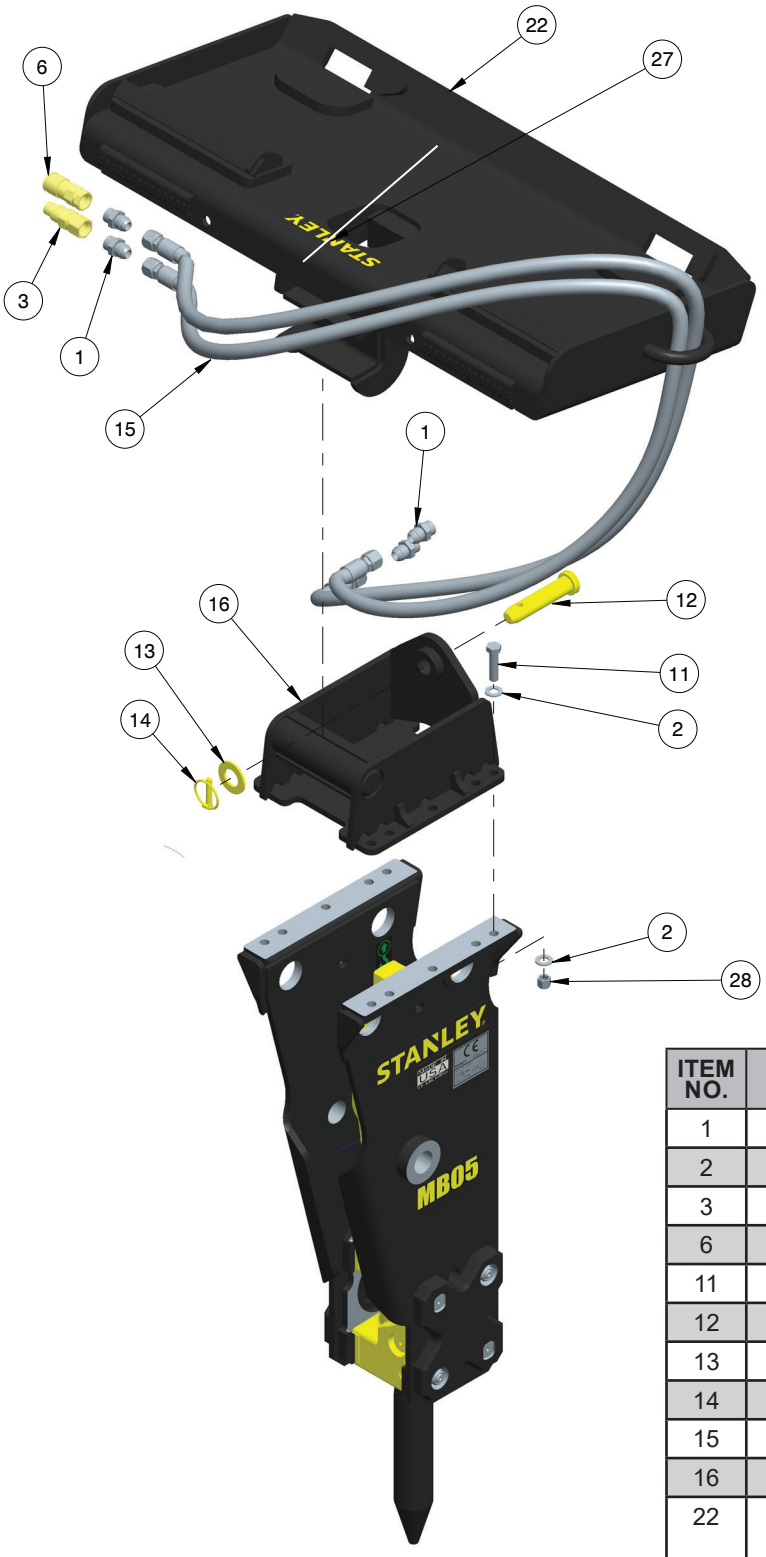

MB05S04

ITEM NO.	PART NO.	QTY	DESCRIPTION
1	02773	4	ADAPTER 12 F50X
2	20876	20	WASHER 5/8" I.D.
3	40092	1	COUPLER F.F. MALE
6	65811	1	COUPLER F.F. FEMALE
11	81114	10	HHCS 5/8-11UNC X 2.500
12	69666	1	SHAFT C&P27
13	371074	1	WASHER
14	372089	1	LYNCH PIN
15	70759	2	HOSE
16	70760	1	C&P027 MOUNTING BRKT
22	73350	1	CP027 SS COMBO BRACKET (INCLUDES ITEMS 12, 13 & 14)
27	74707	1	DECAL, "STANLEY", 8.5 INCH
28	371507	10	NYLOCK NUT 5/8-11UNC

MB05S05 SKID STEER XCHANGE TOP

NOTE: Item # 23 Includes 2 Washers 12712, 2 Lynch Pins 12713 and 1 Exchange Pin 73387 Not pictured

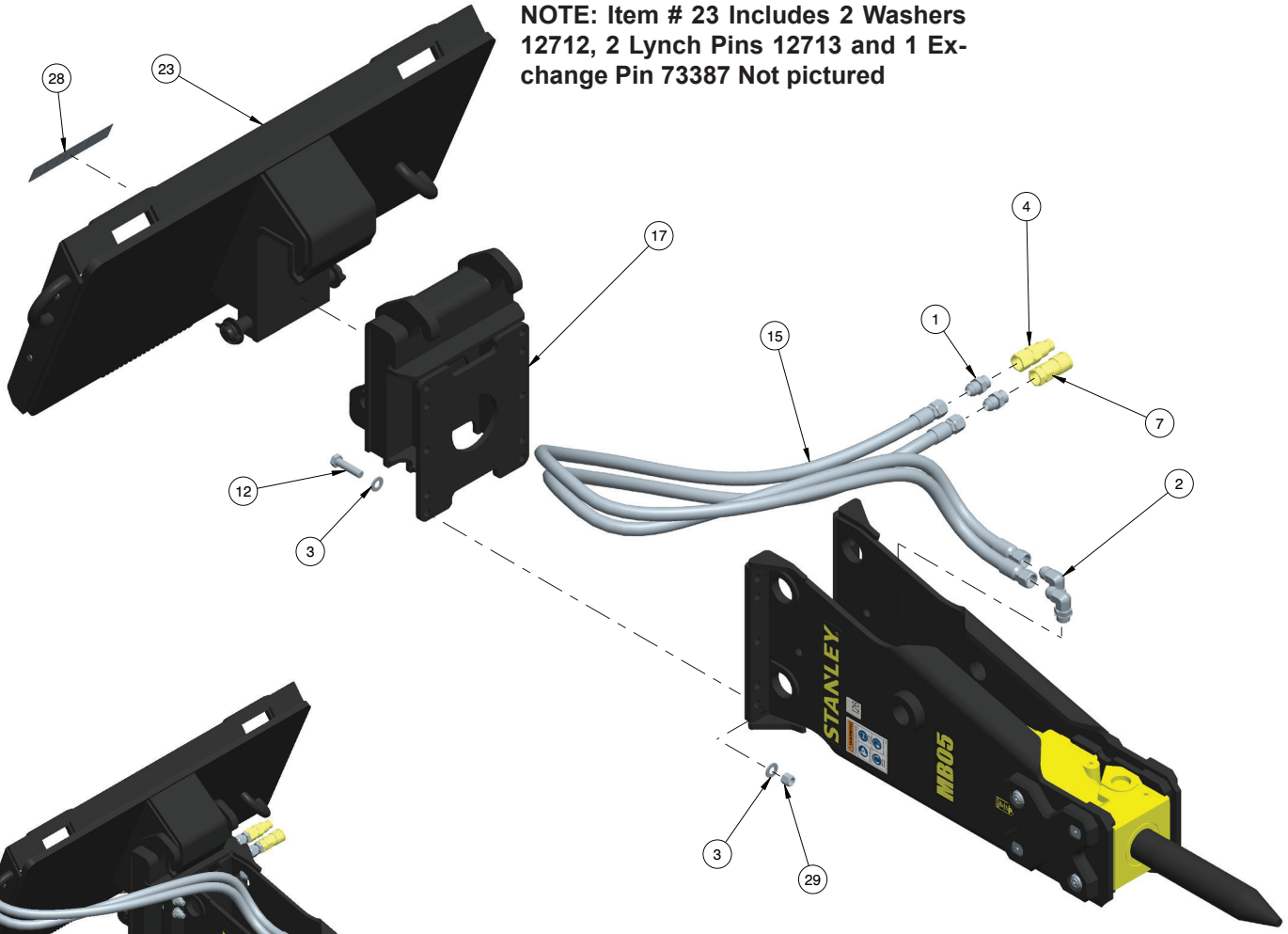

MB05S05

MB05E05

ITEM NO.	PART NO.	QTY	DESCRIPTION
1	02773	2	ADAPTER
2	05967	2	STRAIGHT THREAD ELBOW
3	20876	20	WASHER 5/8" I.D.
4	40092	1	COUPLER F.F. MALE
7	65811	1	COUPLER F.F. FEMALE
12	81114	10	HHCS 5/8-11UNC X 2.250
15	70759	1	HOSE
17	70762	1	EXCHANGE TOP
23	73369	1	EXCHANGE SS BRACKET (SEE NOTE AT TOP OF PAGE)
28	74707	1	DECAL, "STANLEY", 8.5 INCH
29	371507	10	NYLOCK NUT 5/8-11UNC

STANLEY

STANLEY®

STANLEY Infrastructure
6430 SE Lake Road
Portland, Oregon 97222 USA
(503) 659-5660 / Fax (503) 652-1780
www.stanleyinfrastructure.com