STANLEY®

HP12 HYDRAULIC POWER UNIT

(HP12B)

USER'S MANUAL

SAFETY, OPERATION AND MAINTENANCE

© 2017 STANLEY Black & Decker, Inc.
New Britain, CT 06053
U.S.A.
81117 12/2017 Ver. 2

TABLE OF CONTENTS

SAFETY SYMBOLS 4
SAFETY PRECAUTIONS 5
TOOL STICKERS AND TAGS 6
HOSE TYPES 7
HOSE RECOMMENDATIONS 8
HTMA / EHTMA REQUIREMENTS 9
OPERATION 10
MAINTENANCE & TESTING 12
TROUBLESHOOTING 13
SPECIFICATIONS 14
HP12 FRAME PARTS ILLUSTRATION 15
HP12 CONTROL PANEL ILLUSTRATION 16
HP12 ENGINE ILLUSTRATION - FRONT 17
HP12 ENGINE ILLUSTRATION - BACK 18
HP12 ENGINE ILLUSTRATION - BASE 19
HOSES, FITTINGS AND CLAMPS 20
MAIN WIRING HARNESS 21
ELECTRICAL SCHEMATIC 22

IMPORTANT

To fill out a product warranty validation form, and for information on your warranty, visit www.stanleyinfrastructure.com and select the Company tab > Warranty.

Note: The warranty validation record must be submitted to validate the warranty.

SERVICING: This manual contains safety, operation and routine maintenance instructions. Servicing of hydraulic tools, other than routine maintenance, must be performed by an authorized and certified dealer. Please read the following warning.

⚠WARNING

SERIOUS INJURY OR DEATH COULD RESULT FROM THE IMPROPER REPAIR OR SERVICE OF THIS TOOL.

REPAIRS AND / OR SERVICE TO THIS TOOL MUST ONLY BE DONE BY AN AUTHORIZED AND CERTIFIED DEALER.

For the nearest certified dealer, call STANLEY Infrastructure at (503) 659-5660 and ask for a Customer Service Representative.

SAFETY SYMBOLS

Safety symbols and signal words, as shown below, are used to emphasize all operator, maintenance and repair actions which, if not strictly followed, could result in a life-threatening situation, bodily injury or damage to equipment.

This is the safety alert symbol. It is used to alert you to potential personal injury hazards. Obey all safety messages that follow this symbol to avoid possible injury or death.

DANGER — This safety alert and signal word indicates an imminently hazardous situation which, if not avoided, will result in death or serious injury.

WARNING — This safety alert and signal word indicates a potentially hazardous situation which, if not avoided, could result in death or serious injury.

CAUTION — This safety alert and signal word indicates a potentially hazardous situation which, if not avoided, could result in death or serious injury.

CAUTION — This signal word indicates a potentially hazardous situation which, if not avoided, may result in property damage.

NOTICE — This signal word indicates a situation which, if not avoided, will result in damage to the equipment.

IMPORTANT — This signal word indicates a situation which, if not avoided, may result in damage to the equipment.

Always observe safety symbols. They are included for your safety and for the protection of the tool.

LOCAL SAFETY REGULATIONS

Enter any local safety regulations here. Keep these instructions in an area accessible to the operator and maintenance personnel.

STANLEY

SAFETY PRECAUTIONS

Tool operators and maintenance personnel must always comply with the safety precautions given in this manual and on the stickers and tags attached to the equipment.

These safety precautions are given for your safety. Review them carefully before operating the tool and before performing general maintenance or repairs.

Supervising personnel should develop additional precautions relating to the specific work area and local safety regulations. If so, place the added precautions in the space provided on page 4.

In addition to this manual, read and understand safety and operating instructions in the engine “Operation & Maintenance Instructions” manual furnished with the HP12 power unit.

The HP12 will provide safe and dependable service if operated in accordance with the instructions given in this manual. Read and understand this manual and any stickers and tags attached to the unit. Failure to do so could result in personal injury or equipment damage.

- Operator must start in a work area without bystanders. The operator must be familiar with all prohibited work areas such as excessive slopes and dangerous terrain conditions.
- Establish a training program for all operators to ensure safe operation.
- Do not operate the power unit unless thoroughly trained or under the supervision of an instructor.
- Always wear safety equipment such as goggles, ear protection, head protection and safety shoes at all times when operating the power unit.
- Do not inspect or clean the power unit while it is running. Accidental engagement of the unit can cause serious injury.
- Always use hoses and fittings rated at 2500 psi/172 bar with a 4-to-1 safety factor. Be sure all hose connections are tight.
- Be sure all hoses are connected for correct flow direction to and from the tool being used.
- Do not inspect hoses and fittings for leaks by using bare hands. “Pin-hole” leaks can penetrate the skin.
- **NEVER OPERATE THE POWER UNIT IN A CLOSED SPACE.** Inhalation of engine exhaust can be fatal.
- Do not operate a damaged or improperly adjusted power unit.
- Never wear loose clothing that can become entangled in the working parts of the power unit.
- Keep all parts of your body away from the working parts of the power unit.
- Keep clear of hot engine exhaust.
- Do not add fuel to the power unit while it is running or is still hot.
- Do not operate the power unit if gasoline odor is present.
- Do not use flammable solvents around the power unit engine.
- Do not operate the power unit within 3.3 ft/1 m of buildings, obstructions or flammable objects.
- Do not reverse tool rotation direction by changing fluid flow direction.
- Allow power unit engine to cool before storing in an enclosed space.
- Always keep critical tool markings, such as labels and warning stickers, legible.
- To avoid personal injury or equipment damage, all tool repair, maintenance and service must only be performed by authorized and properly trained personnel.

TOOL STICKERS AND TAGS

74759 Power Unit Dash Decal

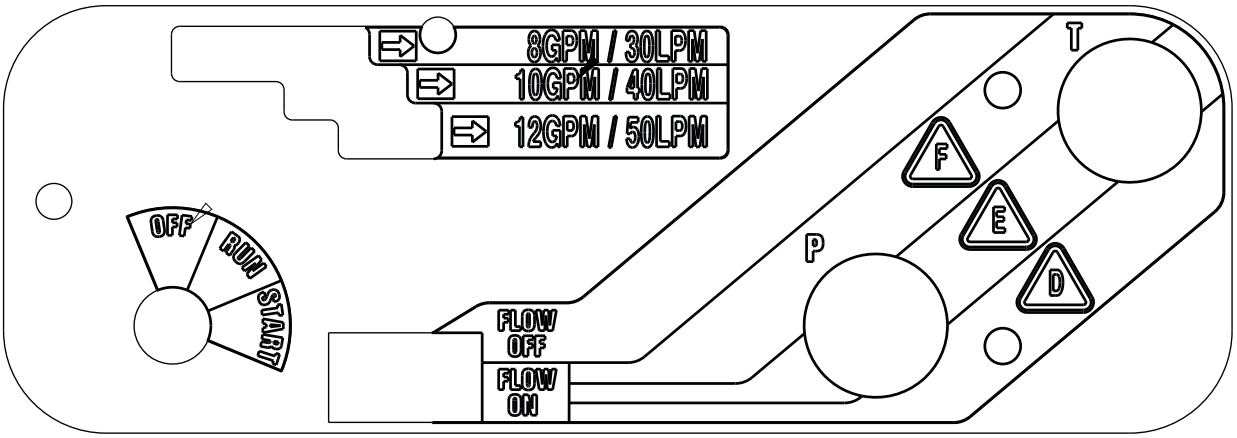

76748 Single Circuit Decal

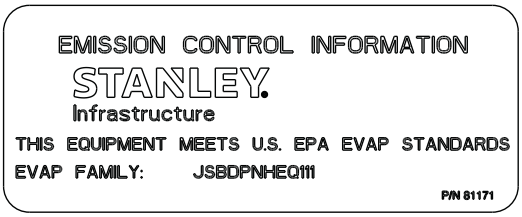

81171 Emissions Decal

HOSE TYPES

The rated working pressure of the hydraulic hose must be equal to or higher than the relief valve setting on the hydraulic system. There are three types of hydraulic hose that meet this requirement and are authorized for use with STANLEY hydraulic tools. They are:

Certified non-conductive — constructed of thermoplastic or synthetic rubber inner tube, synthetic fiber braid reinforcement, and weather resistant thermoplastic or synthetic rubber cover. *Hose labeled **certified non-conductive** is the only hose authorized for use near electrical conductors.*

Wire-braided (conductive) — constructed of synthetic rubber inner tube, single or double wire braid reinforcement, and weather resistant synthetic rubber cover. *This hose is **conductive** and must never be used near electrical conductors.*

Fabric-braided (not certified or labeled non-conductive) — constructed of thermoplastic or synthetic rubber inner tube, synthetic fiber braid reinforcement, and weather resistant thermoplastic or synthetic rubber cover. *This hose is **not certified non-conductive** and must never be used near electrical conductors.*

HOSE SAFETY TAGS

To help ensure your safety, the following DANGER tags are attached to all hose purchased from STANLEY. DO NOT REMOVE THESE TAGS.

If the information on a tag is illegible because of wear or damage, replace the tag immediately. A new tag may be obtained from your STANLEY Distributor.

THE TAG SHOWN BELOW IS ATTACHED TO "CERTIFIED NON-CONDUCTIVE" HOSE

DO NOT REMOVE THIS TAG

D A N G E R

1. FAILURE TO USE HYDRAULIC HOSE LABELED AND CERTIFIED AS NON-CONDUCTIVE WHEN USING HYDRAULIC TOOLS ON OR NEAR ELECTRIC LINES MAY RESULT IN DEATH OR SERIOUS INJURY.

   FOR PROPER AND SAFE OPERATION MAKE SURE THAT YOU HAVE BEEN PROPERLY TRAINED IN CORRECT PROCEDURES REQUIRED FOR WORK ON OR AROUND ELECTRIC LINES.

2. BEFORE USING HYDRAULIC HOSE LABELED AND CERTIFIED AS NON-CONDUCTIVE ON OR NEAR ELECTRIC LINES. WIPE THE ENTIRE LENGTH OF THE HOSE AND FITTING WITH A CLEAN DRY ABSORBENT CLOTH TO REMOVE DIRT AND MOISTURE AND TEST HOSE FOR MAXIMUM ALLOWABLE CURRENT LEAKAGE IN ACCORDANCE WITH SAFETY DEPARTMENT INSTRUCTIONS.

SEE OTHER SIDE

SIDE 1

D A N G E R

3. **DO NOT** EXCEED HOSE WORKING PRESSURE OR ABUSE HOSE. IMPROPER USE OR HANDLING OF HOSE COULD RESULT IN BURST OR OTHER HOSE FAILURE. KEEP HOSE AS FAR AWAY AS POSSIBLE FROM BODY AND **DO NOT** PERMIT DIRECT CONTACT DURING USE. CONTACT AT THE BURST CAN CAUSE BODILY INJECTION AND SEVERE PERSONAL INJURY.
4. HANDLE AND ROUTE HOSE CAREFULLY TO AVOID KINKING, ABRASION, CUTTING, OR CONTACT WITH HIGH TEMPERATURE SURFACES. **DO NOT** USE IF KINKED. **DO NOT** USE HOSE TO PULL OR LIFT TOOLS, POWER UNITS, ETC.
5. CHECK ENTIRE HOSE FOR CUTS CRACKS LEAKS ABRASIONS, BULGES, OR DAMAGE TO COUPLINGS IF ANY OF THESE CONDITIONS EXIST, REPLACE THE HOSE IMMEDIATELY. NEVER USE TAPE OR ANY DEVICE TO ATTEMPT TO MEND THE HOSE.
6. AFTER EACH USE STORE IN A CLEAN DRY AREA.

SEE OTHER SIDE

DO NOT REMOVE THIS TAG

SIDE 2

(Shown smaller than actual size)

THE TAG SHOWN BELOW IS ATTACHED TO "CONDUCTIVE" HOSE.

DO NOT REMOVE THIS TAG

D A N G E R

1. DO NOT USE THIS HYDRAULIC HOSE ON OR NEAR ELECTRIC LINES. THIS HOSE IS NOT LABELED OR CERTIFIED AS NON-CONDUCTIVE. USING THIS HOSE ON OR NEAR ELECTRICAL LINES MAY RESULT IN DEATH OR SERIOUS INJURY.
2. FOR PROPER AND SAFE OPERATION MAKE SURE THAT YOU HAVE BEEN PROPERLY TRAINED IN CORRECT PROCEDURES REQUIRED FOR WORK ON OR AROUND ELECTRIC LINES.
3. **DO NOT** EXCEED HOSE WORKING PRESSURE OR ABUSE HOSE. IMPROPER USE OR HANDLING OF HOSE COULD RESULT IN BURST OR OTHER HOSE FAILURE. KEEP HOSE AS FAR AWAY AS POSSIBLE FROM BODY AND **DO NOT** PERMIT DIRECT CONTACT DURING USE. CONTACT AT THE BURST CAN CAUSE BODILY INJECTION AND SEVERE PERSONAL INJURY.
4. HANDLE AND ROUTE HOSE CAREFULLY TO AVOID KINKING, CUTTING, OR CONTACT WITH HIGH TEMPERATURE SURFACES. **DO NOT** USE IF KINKED. **DO NOT** USE HOSE TO PULL OR LIFT TOOLS, POWER UNITS, ETC.

SEE OTHER SIDE

SIDE 1

D A N G E R

5. CHECK ENTIRE HOSE FOR CUTS CRACKS LEAKS ABRASIONS, BULGES, OR DAMAGE TO COUPLINGS IF ANY OF THESE CONDITIONS EXIST, REPLACE THE HOSE IMMEDIATELY. NEVER USE TAPE OR ANY DEVICE TO ATTEMPT TO MEND THE HOSE.
6. AFTER EACH USE STORE IN A CLEAN DRY AREA.

SEE OTHER SIDE

DO NOT REMOVE THIS TAG

SIDE 2

(Shown smaller than actual size)

Tool to Hydraulic Circuit Hose Recommendations

The chart to the right shows recommended minimum hose diameters for various hose lengths based on gallons per minute (GPM)/liters per minute (LPM). These recommendations are intended to keep return line pressure (back pressure) to a minimum acceptable level to ensure maximum tool performance.

This chart is intended to be used for hydraulic tool applications only based on STANLEY tool operating requirements and should not be used for any other applications.

All hydraulic hose must have at least a rated minimum working pressure equal to the maximum hydraulic system relief valve setting.

All hydraulic hose must meet or exceed specifications as set forth by SAE J517.

Oil Flow		Hose Lengths		Inside Diameter		USE (Press/Return)	Min. Working Pressure	
GPM	LPM	FEET	METERS	INCH	MM		PSI	BAR
Certified Non-Conductive Hose - Fiber Braid - for Utility Bucket Trucks								
4-9	15-34	up to 10	up to 3	3/8	10	Both	2250	155
Conductive Hose - Wire Braid or Fiber Braid -DO NOT USE NEAR ELECTRICAL CONDUCTORS								
4-6	15-23	up to 25	up to 7.5	3/8	10	Both	2500	175
4-6	15-23	26-100	7.5-30	1/2	13	Both	2500	175
5-10.5	19-40	up to 50	up to 15	1/2	13	Both	2500	175
5-10.5	19-40	51-100	15-30	5/8	16	Both	2500	175
5-10.5	19-40	100-300	30-90	5/8	16	Pressure	2500	175
				3/4	19	Return	2500	175
10-13	38-49	up to 50	up to 15	5/8	16	Both	2500	175
10-13	38-49	51-100	15-30	5/8	16	Pressure	2500	175
				3/4	19	Return	2500	175
10-13	38-49	100-200	30-60	3/4	19	Pressure	2500	175
				1	25.4	Return	2500	175
13-16	49-60	up to 25	up to 8	5/8	16	Pressure	2500	175
				3/4	19	Return	2500	175
13-16	49-60	26-100	8-30	3/4	19	Pressure	2500	175
				1	25.4	Return	2500	175

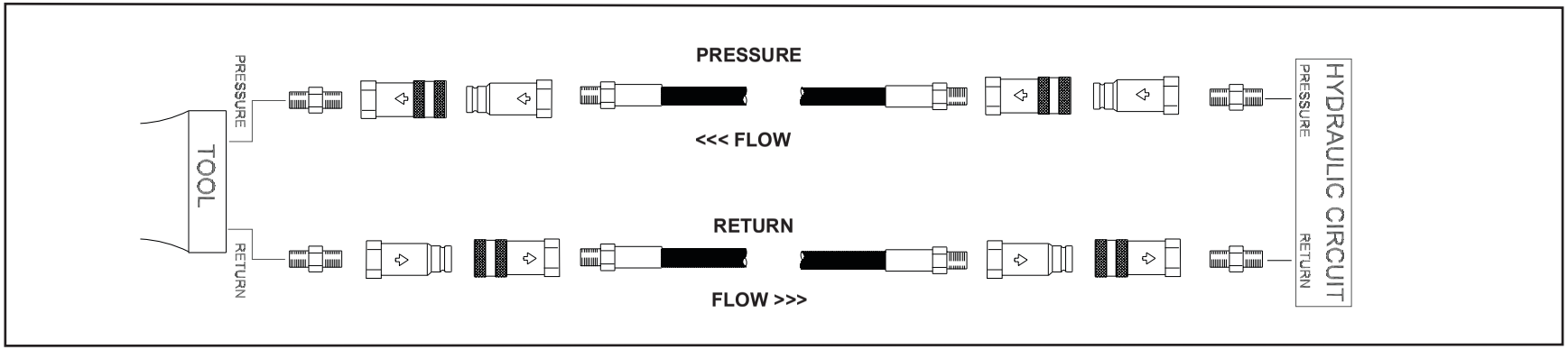

Figure 1. Typical Hose Connections

HTMA / EHTMA REQUIREMENTS

HTMA / EHTMA REQUIREMENTS

	TOOL TYPE			
HTMA HYDRAULIC SYSTEM REQUIREMENTS	**TYPE I**	**TYPE II**	**TYPE RR**	**TYPE III**
Flow range	4-6 GPM (15-23 LPM)	7-9 GPM (26-34 LPM)	9-10.5 GPM (34-40 LPM)	11-13 GPM (42-49 LPM)
Nominal operating pressure (At the power supply outlet)	1500 psi (103 bar)	1500 psi (103 bar)	1500 psi (103 bar)	1500 psi (103 bar)
System relief valve setting (At the power supply outlet)	2100-2250 psi (145-155 bar)	2100-2250 psi (145-155 bar)	2200-2300 psi (152-159 bar)	2100-2250 psi (145-155 bar)
Maximum back pressure (At tool end of the return hose)	250 psi (17 bar)	250 psi (17 bar)	250 psi (17 bar)	250 psi (17 bar)
Measured at a max fluid viscosity of: (At minimum operating temperature)	400 ssu* (82 centistokes)	400 ssu* (82 centistokes)	400 ssu* (82 centistokes)	400 ssu* (82 centistokes)
Temperature: Sufficient heat rejection capacity to limit maximum fluid temperature to: (At maximum expected ambient temperature)	140° F (60° C)	140° F (60° C)	140° F (60° C)	140° F (60° C)
Minimum cooling capacity at a temperature difference of between ambient and fluid temps	3 hp (2.24 kW) 40° F (22° C)	5 hp (3.73 kW) 40° F (22° C)	6 hp (5.22 kW) 40° F (22° C)	7 hp (4.47 kW) 40° F (22° C)
NOTE: Do not operate the tool at oil temperatures above 140° F (60° C). Operation at higher temperatures can cause operator discomfort at the tool.				
Filter minimum full-flow filtration	25 microns	25 microns	25 microns	25 microns
Sized for flow of at least: (For cold temp startup and maximum dirt-holding capacity)	30 GPM (114 LPM)	30 GPM (114 LPM)	30 GPM (114 LPM)	30 GPM (114 LPM)
Hydraulic fluid, petroleum based (premium grade, anti-wear, non-conductive) Viscosity (at minimum and maximum operating temps)	100-400 ssu (20-82 centistokes)	100-400 ssu (20-82 centistokes)	100-400 ssu (20-82 centistokes)	100-400 ssu (20-82 centistokes)
NOTE: When choosing hydraulic fluid, the expected oil temperature extremes that will be experienced in service determine the most suitable temperature viscosity characteristics. Hydraulic fluids with a viscosity index over 140 will meet the requirements over a wide range of operating temperatures. *SSU = Saybolt Seconds Universal				

	CLASSIFICATION				
EHTMA HYDRAULIC SYSTEM REQUIREMENTS					
Flow range	3.5-4.3 GPM (13.5-16.5 LPM)	4.7-5.8 GPM (18-22 LPM)	7.1-8.7 GPM (27-33 LPM)	9.5-11.6 GPM (36-44 LPM)	11.8-14.5 GPM (45-55 LPM)
Nominal operating pressure (At the power supply outlet)	1870 psi (129 bar)	1500 psi (103 bar)	1500 psi (103 bar)	1500 psi (103 bar)	1500 psi (103 bar)
System relief valve setting (At the power supply outlet)	2495 psi (172 bar)	2000 psi (138 bar)	2000 psi (138 bar)	2000 psi (138 bar)	2000 psi (138 bar)

NOTE: These are general hydraulic system requirements. See tool specification page for tool specific requirements.

OPERATION

PREPARATION FOR USE

Do not operate HP12 until you have completed the following steps:

READ THE ENGINE "OPERATING & MAINTENANCE INSTRUCTIONS" MANUAL.

CHECK ENGINE CRANKCASE OIL LEVEL

Check the oil level before starting the engine. Make sure the oil level is at the FULL MARK on the dipstick. Do not overfill. Use detergent oil classified "For Service SE, SF, SG" as specified in the engine "Operating & Maintenance Instructions" manual. See the "Operating & Maintenance Instructions" manual for oil viscosity grade.

CHECK ENGINE FUEL LEVEL

If fuel level is low, fill with unleaded gasoline (85 octane minimum).

CHECK HYDRAULIC FLUID

Ensure there is hydraulic fluid in the hydraulic oil tank. Below is a list of recommended oils.

Brand	Biodegradable	Description
CITGO	No	Hydurance AW32
AMS Oil	No	HVH 32
Exxon Mobil	No	Univis HVI26*
Exxon Mobil	No	DTE 10 Excel
Shell	No	S2 V 32
Chevron	No	Rando HDZ 32
Conoco Phillips	No	Unax AW-WR-32
Clarion (CITGO)	Yes	Green Bio 32
Exxon Mobil	Yes	EAL 224H
Chevron	Yes	Clarity AW32
Terresolve	Yes	Envirologic 132
Shell	Yes	Naturelle HF-E-32

*Recommended for extreme cold temperatures

INSTALL HYDRAULIC CONNECTIONS

STANLEY recommends you use hose lengths of 25 ft/8 m with 1/2 inch/12.7 mm inside diameter. Hoses must have a working pressure rating of at least 2500 psi/175 bar. Hose ends must have male threads compatible with H.T.M.A. quick disconnect fittings (NPT).

H.T.M.A. approved quick disconnect couplings are installed to hydraulic hoses so that the direction of oil flow is always from the male to the female coupling. Additional fittings, such as reducers or adapter fittings, are not required.

If adapter fittings are used, they must be approved steel hydraulic fittings meeting a minimum operating pressure rating of 2500 psi/172 bar. Do not use galvanized pipe fittings or black pipe fittings.

Use thread tape or pipe joint compound when installing quick disconnect couplings to hose or tool fittings. Follow the instructions furnished with the selected thread sealant. **DO NOT OVERTIGHTEN THE FITTINGS.**

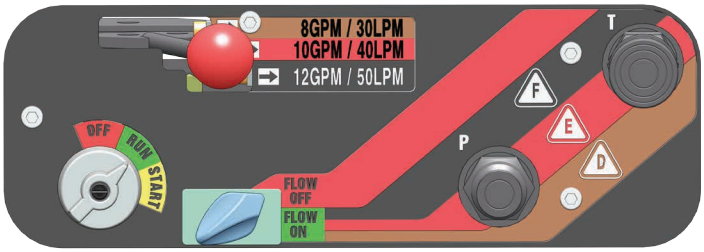

Connect the pressure hose to the bottom (male) fitting.

Connect the return hose to the top (female) fitting.

STANLEY

OPERATION

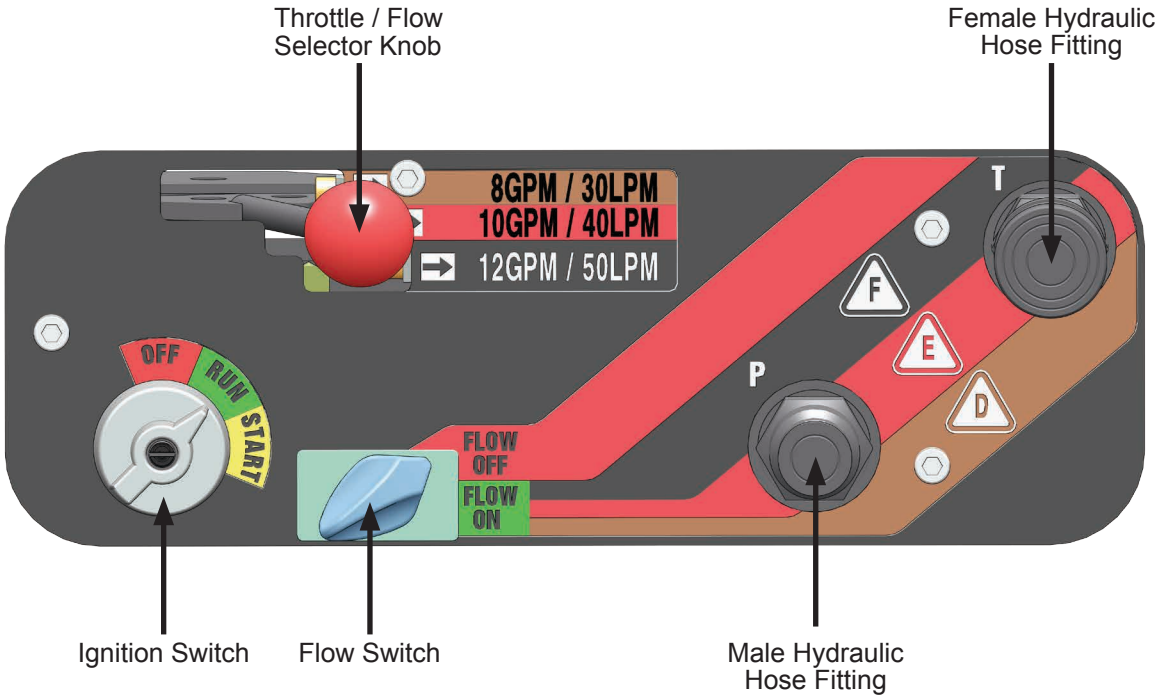

CONTROLS

HP12 can provide one 8 GPM/30 LPM circuit, one 10 GPM/40 LPM circuit or one 12 GPM/45 LPM circuit.

STARTUP

1. Toggle the Flow Switch to the "FLOW OFF" position.

Note: HP12 will not start unless the Flow Switch is in the "FLOW OFF" position.

2. Pull the choke knob out
3. Select the desired flow using the Flow Selector Knob.
4. Turn the Ignition Switch to the "START" position. After the engine starts, release the switch.
5. Gradually push in the choke knob as the engine begins to idle smoothly.
6. Allow the engine to warm up.
7. Connect hoses and the tool.
8. Toggle the Flow Switch to the “FLOW ON” position.

CHANGING CIRCUIT FLOW

1. Toggle the Flow Switch to the “FLOW OFF” position
2. Select the desired circuit flow using the Flow Selector Knob.
3. Toggle the Flow Switch to the “FLOW ON” position.

SHUTDOWN

1. Toggle the Flow Switch to the “FLOW OFF” position.
2. Allow the engine to idle for approximately one minute
3. Turn the Ignition Switch to the “OFF” position.

COLD WEATHER STARTUP

Hydraulic fluid becomes thicker in cold weather. STANLEY recommends that the engine be run at a low idle (5 GMP/20 LPM setting) long enough to bring the fluid temperature up to a minimum of 50°F/10°C. Allow the hydraulic fluid to circulate through the tool hoses until they are warm.

Once the hydraulic oil is warm, you may operate the HP12 as normal.

MAINTENANCE & TESTING

ENGINE MAINTENANCE SCHEDULE

Follow the maintenance instructions provided in the engine "Operating & Maintenance Instructions" manual.

HYDRAULIC SYSTEM MAINTENANCE

- Check hydraulic fluid level daily and fill if needed.
- Check hydraulic lines and fittings daily for leaks, kinks or damage. Do not use your hand to perform this check.
- Remove condensed moisture from the hydraulic fluid:
    1. Set the flow selector to a 8 GPM/20 LPM flow.
    2. Start the engine and pump the fluid, out of the male hose fitting, into a 5 gal. container.
    3. When hydraulic tank is empty, turn the Ignition Switch to the "Off" position.
    4. Let the water settle to the bottom of the container.
    5. Pour the hydraulic fluid back into the tank, being careful to not disturb the water sitting at the bottom of the container.
- Change the hydraulic filter every 200 hours of operation. Change more often if used in cold, moist or dusty conditions.
- Check oil cooler. Remove debris with air pressure.

BATTERY

- Do not charge the battery with an automotive battery charger. Charging at higher than 2 amps will damage the battery.
- If the engine stalls during operation, set the ignition switch to the "OFF" position to preserve battery charge.

STORAGE

- Clean the unit thoroughly. Do not pressure wash.
- Always store the unit in a clean and dry location.
- If storing for over 30 days, add an additive to the fuel tank to prevent the fuel from gumming. Run the engine to circulate the additive.
- Replace crankcase oil.

GENERAL

Tests should be performed periodically to ensure HP12 is operating at maximum efficiency. STANLEY Circuit Tester ,part number 04182, can be used to isolate problems in both the engine and hydraulic system.

TESTING THE HYDRAULIC CIRCUIT

Test to ensure the hydraulic pump is supplying the correct flow and pressure, and that the system relief valve is operating properly. Before testing, make sure the engine is warm and operating smoothly.

1. Turn the flow selector switch to the "OFF" position.
2. Set the flow control to the flow you would like to test.
3. Connect the STANLEY Circuit Tester to the tool hoses.
4. Fully open the tester restrictor valve (counterclockwise).
5. Start the engine.
6. The test flow gauge should read +/- 1 GPM of the selected flow.
7. Slowly turn the restrictor valve clockwise while watching the pressure gauge. The flow rate should not change as the pressure reaches 2100-2200 psi/148-155 bar.
8. At 2100-2200 psi/148-155 bar, the relief valve should begin to open. The flow rate should start to drop because the relief valve is allowing fluid to bypass to the hydraulic fluid tank. The relief valve is preset at the factory. If it does not open within the above range, the relief valve must be reset as follows:

    a. The relief valve is located on the right side of the unit, behind the dash panel (7, page 16). Use a wrench to loosen the nut on the relief valve.

    b. Use an Allen wrench to adjust the relief valve. Turn clockwise to raise the opening pressure, and counterclockwise to reduce the opening pressure.

    c. Tighten the nut and test again.

STANLEY

TROUBLESHOOTING

Problem	Cause	Remedy
Engine will not start.	Flow Switch is not in the “FLOW OFF” position.	Make sure the Flow Switch is in the “FLOW OFF” position before attempting to start the power unit.
	Battery is not connected.	Check the battery cables for continuity and re-attach to the battery.
	Weak battery charge.	Test the battery voltage and charge if necessary. If the battery will not hold a charge, replace.
	No Fuel.	Ensure the power unit is cool, then add fuel.
	Fuel filter is plugged.	Replace the fuel filter.
	Defective spark plugs.	Remove the spark plugs and check the gap. Replace if necessary.
Hydraulic fluid is blowing out of the fluid reservoir vent.	Hydraulic fluid tank is overfilled.	Remove hydraulic fluid from the tank.
	Hydraulic pump is leaking.	Check the pump connections (see page 20). Tighten if necessary.
The hydraulic tool connected to the power unit will not operate.	The Flow Selector Knob is not in the proper position for the connected tool.	Ensure that the Flow Selector Knob is positioned for the correct fluid flow for your tool.
	The tool is not properly connected to the power unit.	Check the connection hoses from the power unit to the tool. Ensure the pressure and the return hoses are in the proper ports on the tool.
	The quick disconnect fittings are defective.	Disconnect the fittings from the hose and ensure there is free flow from each end of the fittings.
	The hydraulic fluid level in the reservoir is too low.	Check the fluid level in the hydraulic fluid tank. Add more fluid if necessary.
	The pump coupling is defective.	Power down the unit and check the coupling between the hydraulic pump and the engine (4, page 18).
	The relief valve is stuck open.	Adjust the valve or replace if necessary (7, page 16).
	Suction hoses are kinked.	Visually check the suction hose for a kink. The hose should have a smooth curve.
	The solenoid is not working.	Check electrical connections (see page 21). Replace if necessary.
	The attached tool is defective.	Refer to the tool manual.

SPECIFICATIONS

Engine: .....23 hp Briggs
Capacity..... One 8 GPM/30 LPM Circuit, One 10 GPM/40 LPM or One 12 GPM/45 LPM Circuit
Length:..... 36 in. / 91.4 cm
Width: ..... 23 in: / 58.4 cm
Height: ..... 29.5 in. / 74.9 cm
Weight (Wet): Single Circuit Briggs .....330 lbs / 149.6 kg
Fuel Tank Capacity: ..... 5.5 gal. / 20.8 ltr
Estimated Gas Consumption Per Hour ..... 1.3 gal / 4 ltr
Hydraulic Reservoir Capacity: ..... 3 gal. / 11 ltr
Relief Valve setting ..... 2100 psi / 145 bar
Full relief setting ..... 2500 psi / 172 bar
HTMA Category ....."D" (30 LPM @ 138 bar)

or "E" (45 LPM @ 138 bar)

Nominal Pressure ..... 1500 psi/103 bar
Max Pressure ..... 2000 psi/138 bar

POWER UNITS,TRACHORSE & GAS/FUEL DRIVEN EQUIPMENT: A1. Federal Emission Component Compliance 40CFR part 1060.120 STANLEY warrants all fuel system emission components for 2 years from the date of original purchase provided there has been no abuse, neglect, modifications or improper maintenance.

Components Covered: The emission-related warranty covers all components whose failure would increase the evaporative emissions. Your emission-related warranty does not cover components whose failure would not increase evaporative emissions. Coverage under this warranty extends only to the following parts; fuel tank, fuel cap, fuel hose and vapor hose from the fuel tank to the engine and any connectors that are apart of the fuel system.

The equipment is designed, built, and equipped so it conforms at the time of sale to the ultimate purchaser and each subsequent purchaser and is in compliance with 40 C.F.R. 1060.120 standards. The equipment is free from defects in materials and workmanship that may keep it from meeting these requirements.

HP12 FRAME PARTS ILLUSTRATION

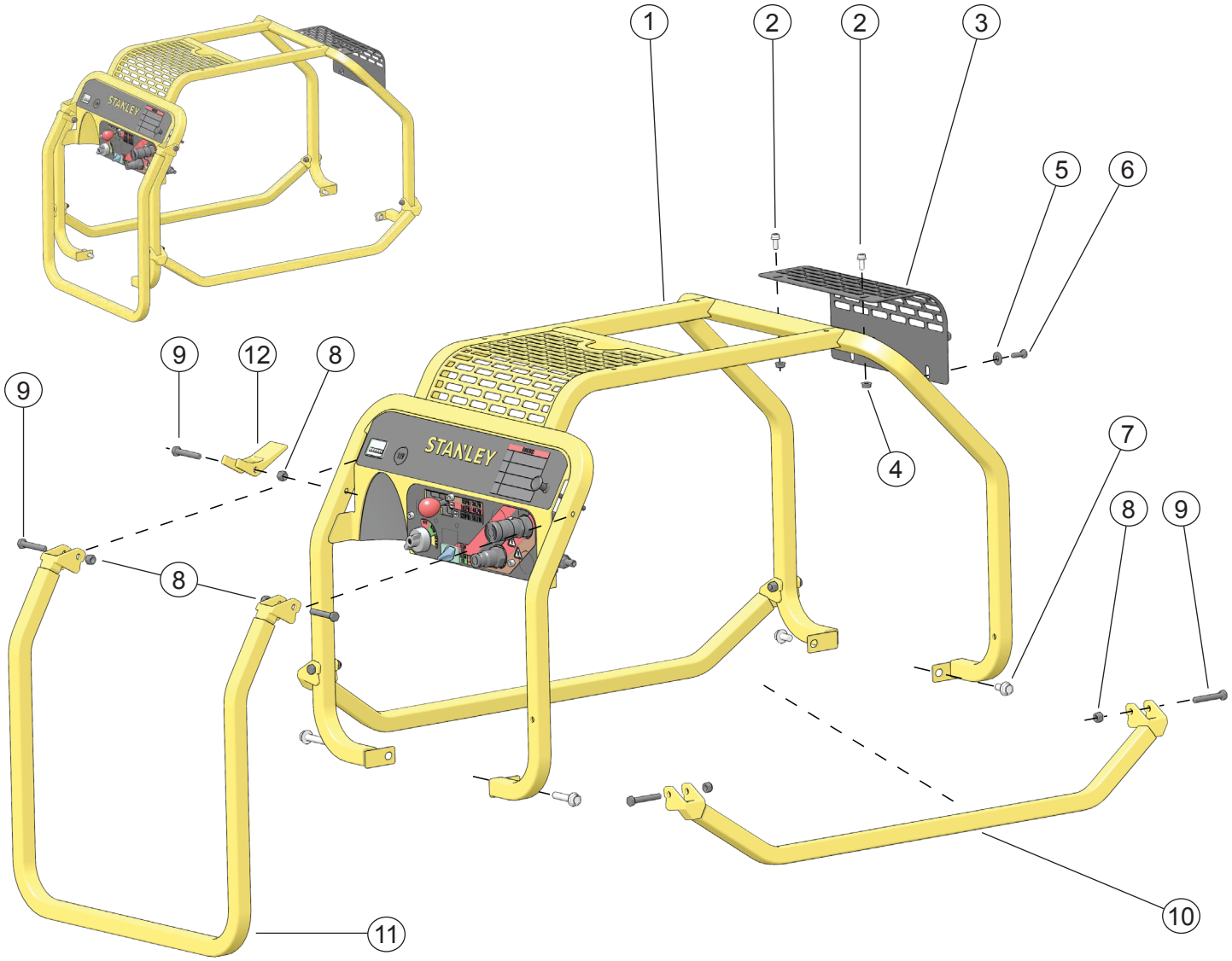

ITEM #	PART #	QTY	DESCRIPTION
1.	76755	1	Frame Weldment
2.	59075	2	Hex Flange Bolt
3.	59079	1	Cooler Guard
4.	59095	2	Hex Flange Nut
5.	60945	2	Washer
6.	15476	2	Hex Head Capscrew
7.	23530	2	Rear Hex Flange Bolt
8.	03906	7	Locknut
9.	370502	7	Hex Head Capscrew
10.	62268	2	Lift Handle
11.	62267	1	Rear Lift Handle
12.	58916	1	Handle Lock

HP12 CONTROL PANEL ILLUSTRATION

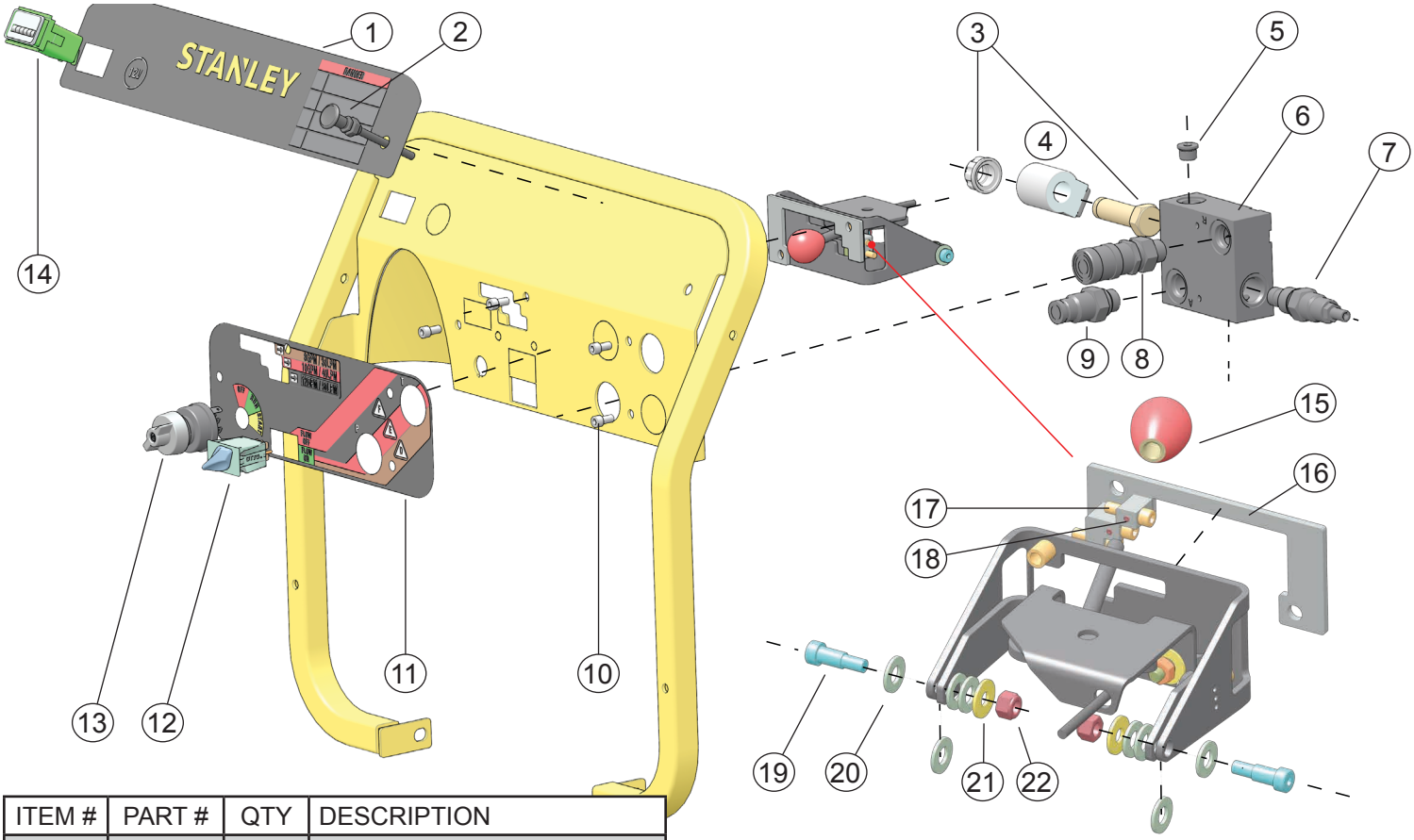

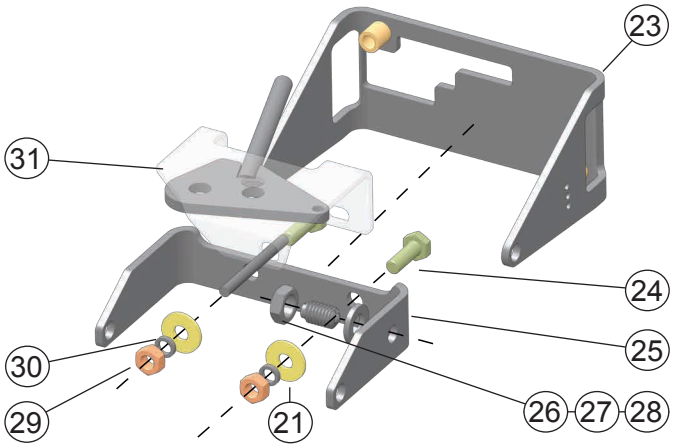

ITEM #	PART #	QTY	DESCRIPTION
1.	74759	1	Dash Decal
2.	62298	1	Choke Cable Assembly
3.	60959	1	Directional Valve with Cap
4.	60958	1	Solenoid Coil
5.	08104	2	Hollow Hex Plug
6.	76711	1	Manifold
	76722		Manifold Assembly (Items 3-7)
7.	59131	1	Relief Valve
8.	58856	1	3/8in. Female Coupler, -8 SAE
9.	58857	1	3/8in. Male Coupler, -8 SAE
10.	60962	4	Capscrew
11.	76748	1	Single Circuit Decal
12.	60955	1	2 Position Rotary Switch
13.	67899	1	3 Position Rotary Switch
14.	60946	1	Hour Meter
15.	204332	1	Throttle Knob
16.	76705	1	Throttle Adjustment Plate
17.	76791	3	Setscrew
18.	76702	3	Socket Head Cap Screw
19.	76785	2	Shoulder Bolt
20.	12175	8	Washer
21.	02259	4	Washer
22.	00719	2	Nut

ITEM #	PART #	QTY	DESCRIPTION
23.	76779	1	Outer Throttle Plate Assembly
24.	02146	2	Hex Head Cap Screw
25.	76700	1	Inner Throttle Plate
26.	20334	1	Nut
27.	210854	1	Ball Detent
28.	01214	1	Washer
29.	00038	2	Nut
30.	00046	2	Washer
31.	208887	1	Throttle Cable Assembly
32.	76710	1	Wire Harness (see page 21)

STANLEY

HP12 ENGINE ILLUSTRATION - FRONT

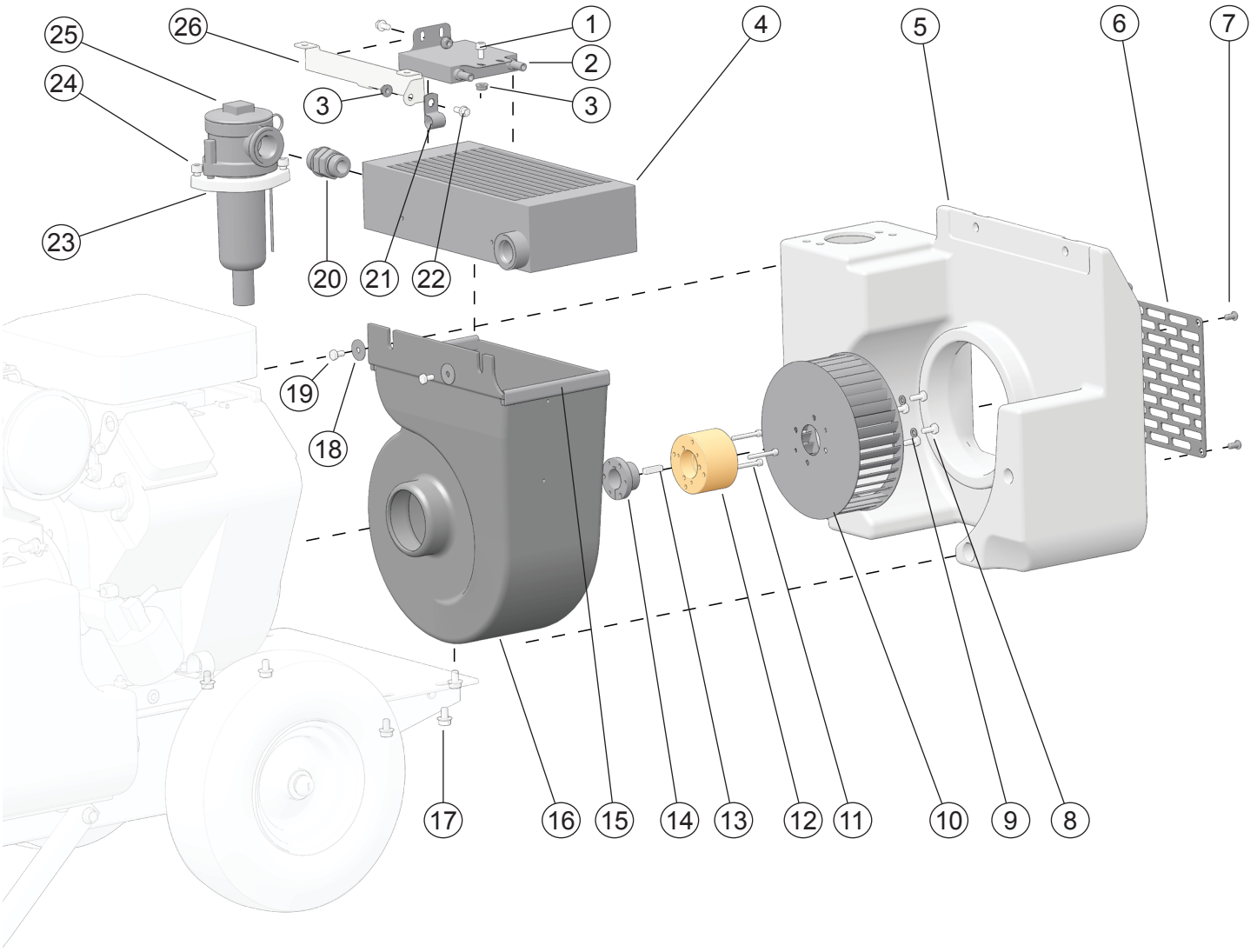

ITEM #	PART #	QTY	DESCRIPTION
1.	59074	2	Flange Bolt
2.	-	-	Provided as Part of Engine
3.	59095	3	Nut
4.	59091	1	Oil Cooler
5.	59077	1	Hydraulic Oil Tank
6.	59080	1	Front Grille
7.	17821	4	Button Head Capscrew
8.	80986	4	Hex Head Capscrew
9.	80984	4	Lock Washer
10.	65107	1	Blower Wheel
11.	00111	3	Capscrew
12.	65108	1	Blower Hub
13.	20990	1	Key
14.	59076	1	Bushing

ITEM #	PART #	QTY	DESCRIPTION
15.	62296	2	Weather Strip
16.	59083	1	Blower Housing
17.	40433	5	Flange Bolt
18.	26831	2	Washer
19.	01213	2	Hex Head Capscrew
20.	51292	1	Standard Thread Union
21.	60774	1	Hose Clamp
22.	59075	1	Flange Bolt
23.	64937	1	Grip Plate
24.	43687	2	Capscrew
25.	40080	1	Filter Assembly
26.	66215	1	Cooler Mount

HP12 ENGINE ILLUSTRATION - BACK

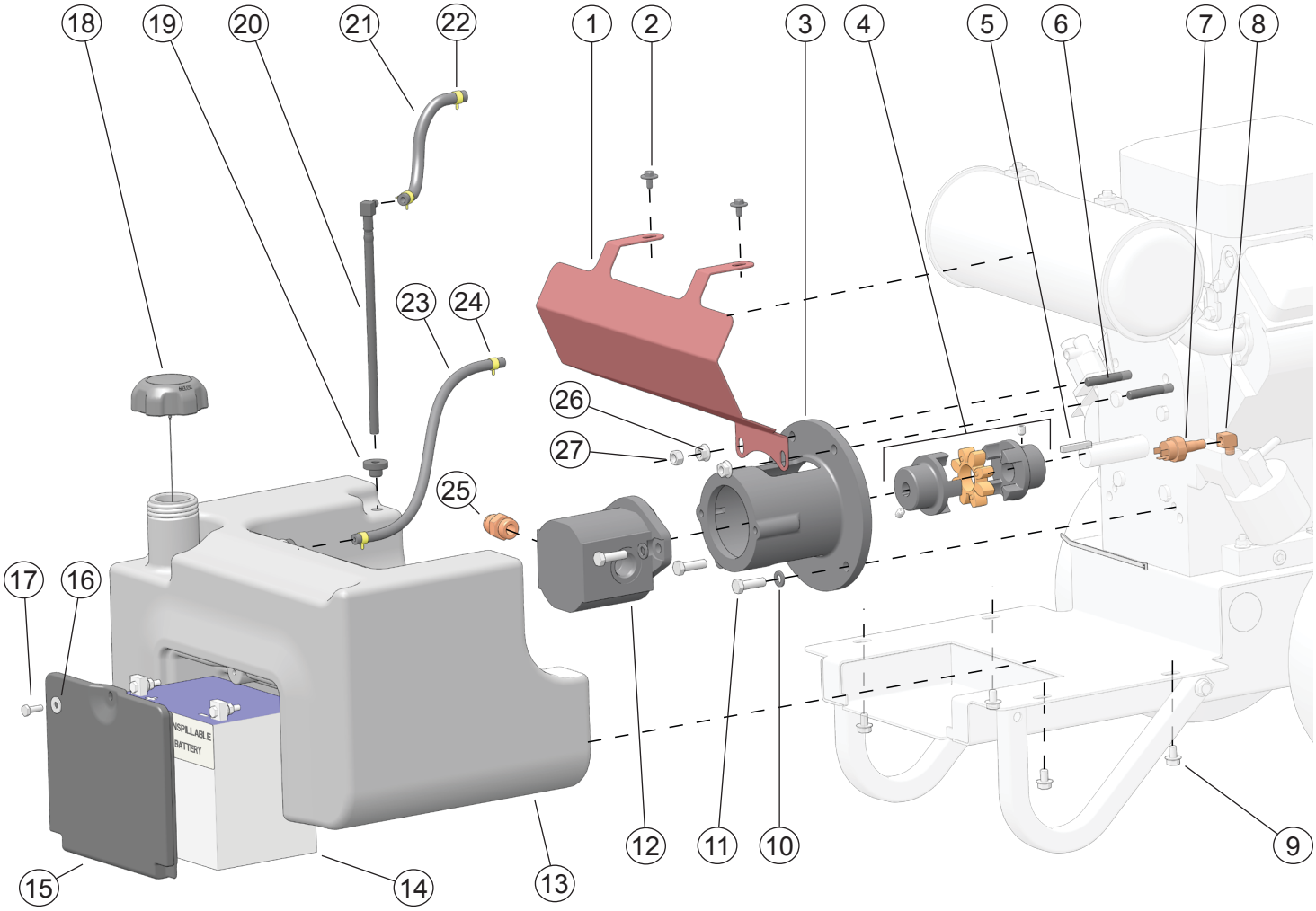

ITEM #	PART #	QTY	DESCRIPTION
1.	66214	1	Heat Shield
2.	36152	2	Hex Washer Screw
3.	56655	1	Pump Mount
4.	56656	1	Coupling
5.	07819	1	Square Key
6.	62385	2	Stud
7.	31765	1	Pressure Switch
8.	69387	1	1/8in NPT Elbow Fitting
9.	40433	4	Flange Bolt
10.	01459	4	Washer
11.	07860	4	Hex Head Capscrew
12.	68561	1	Pump
13.	73050	1	Fuel Tank
14.	04303	1	Battery

ITEM #	PART #	QTY	DESCRIPTION
15.	60921	1	Battery Cover
16.	60945	1	Washer
17.	15476	1	Hex Head Cap Screw
18.	71794	1	Fuel Tank Cap
19.	60920	2	Grommet
20.	60919	1	Fuel Elbow
21.	62289	1	Fuel Hose
22.	72317	2	Hose Clamp
23.	72571	1	Fuel Vapor Hose
24.	72451	3	Hose Clamp
25.	350104	1	Connector
26.	18893	2	Flange Nut
27.	371503	1	Nut

STANLEY

HP12 ENGINE ILLUSTRATION - BASE

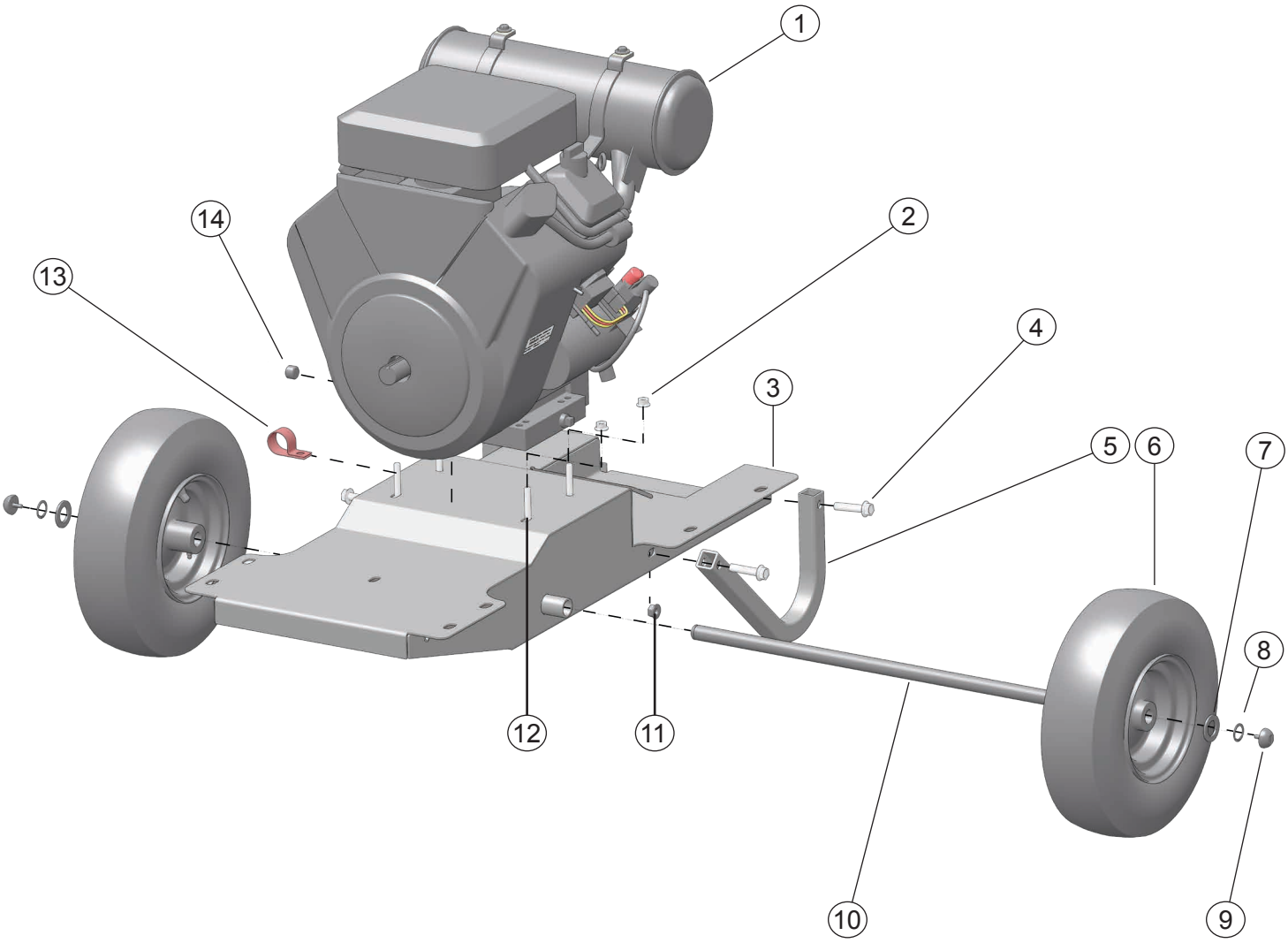

ITEM #	PART #	QTY	DESCRIPTION
1.	76721	1	Engine
2.	12787	4	Flange Nut
3.	58897	1	Frame Base Weldment
4.	58976	4	Flange Bolt
5.	58975	2	Foot
6.	56633	2	Wheel and Tire
7.	21318	2	Washer
8.	31240	2	Retaining Ring
9.	21714	2	Handle Bumper
10.	58917	1	Axle
11.	18893	2	Flange Nut
12.	58942	4	Flange Bolt
13.	24287	1	Hose Clamp
14.	01212	1	Pipe Plug

HOSES, FITTINGS AND CLAMPS

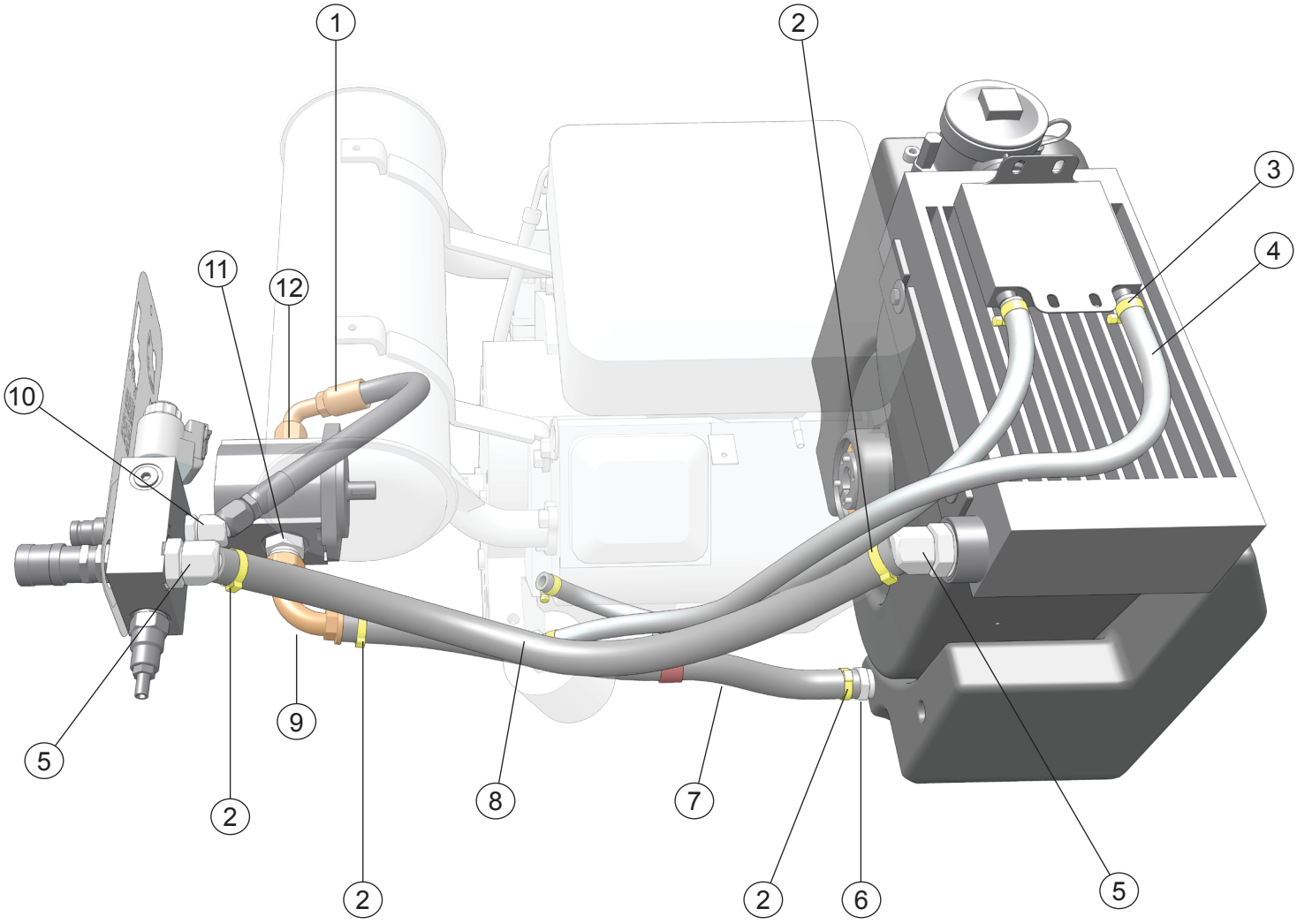

ITEM #	PART #	QTY	DESCRIPTION
1.	58943	1	Hose
2.	62199	4	Hose Clamp
3.	69384	4	Hose Clamp
4.	69383	2	Hose
5.	40364	2	45° Elbow Fitting
6.	59105	1	Hose Barb
7.	59089	1	Hose
8.	59088	1	Hose
9.	58569	1	90° Elbow Fitting
10.	350000	1	45° Fitting
11.	02773	1	Adapter
12.	350104	1	Connector

STANLEY

MAIN WIRING HARNESS

PART NUMBER 76710

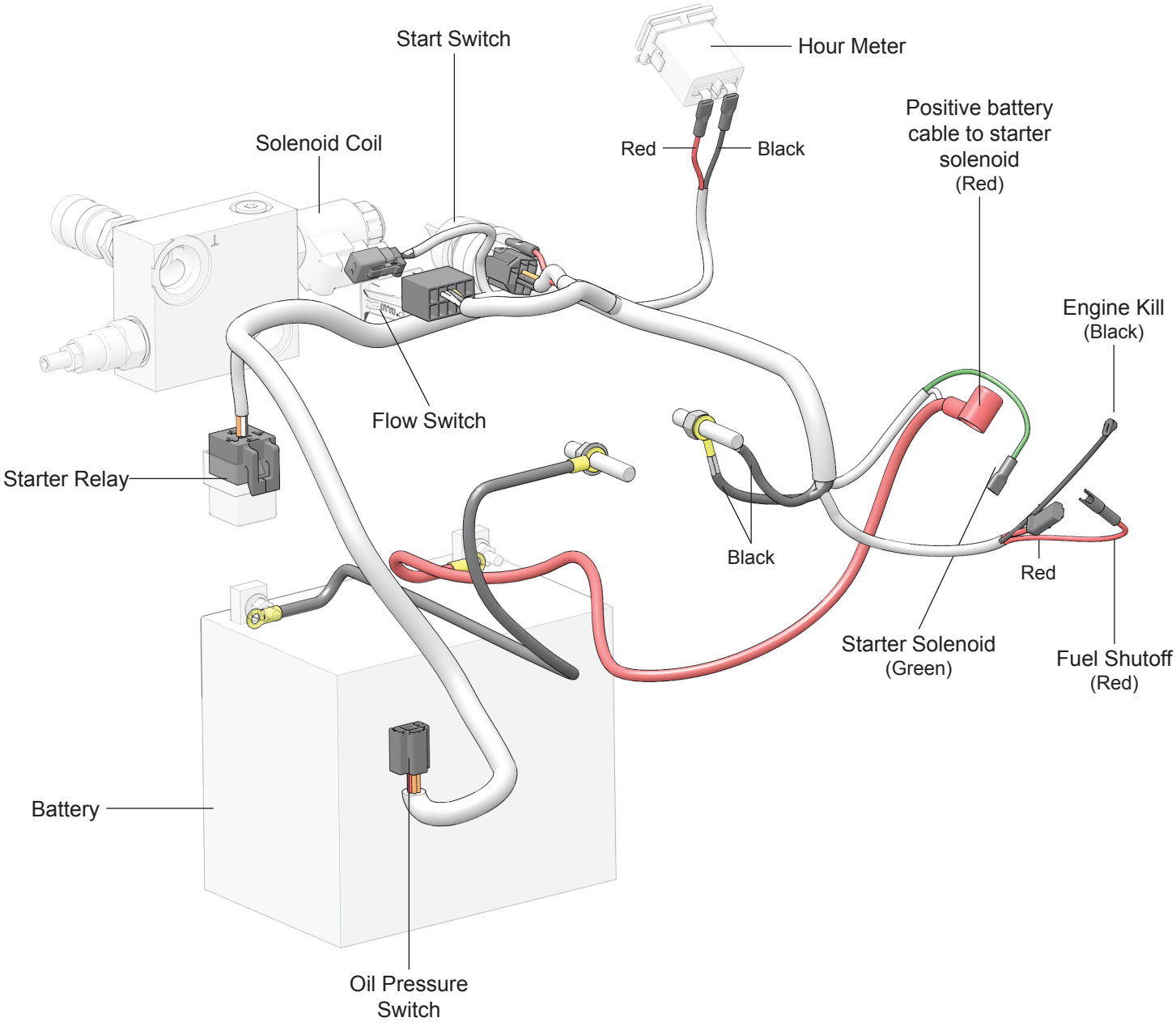

ELECTRICAL SCHEMATIC

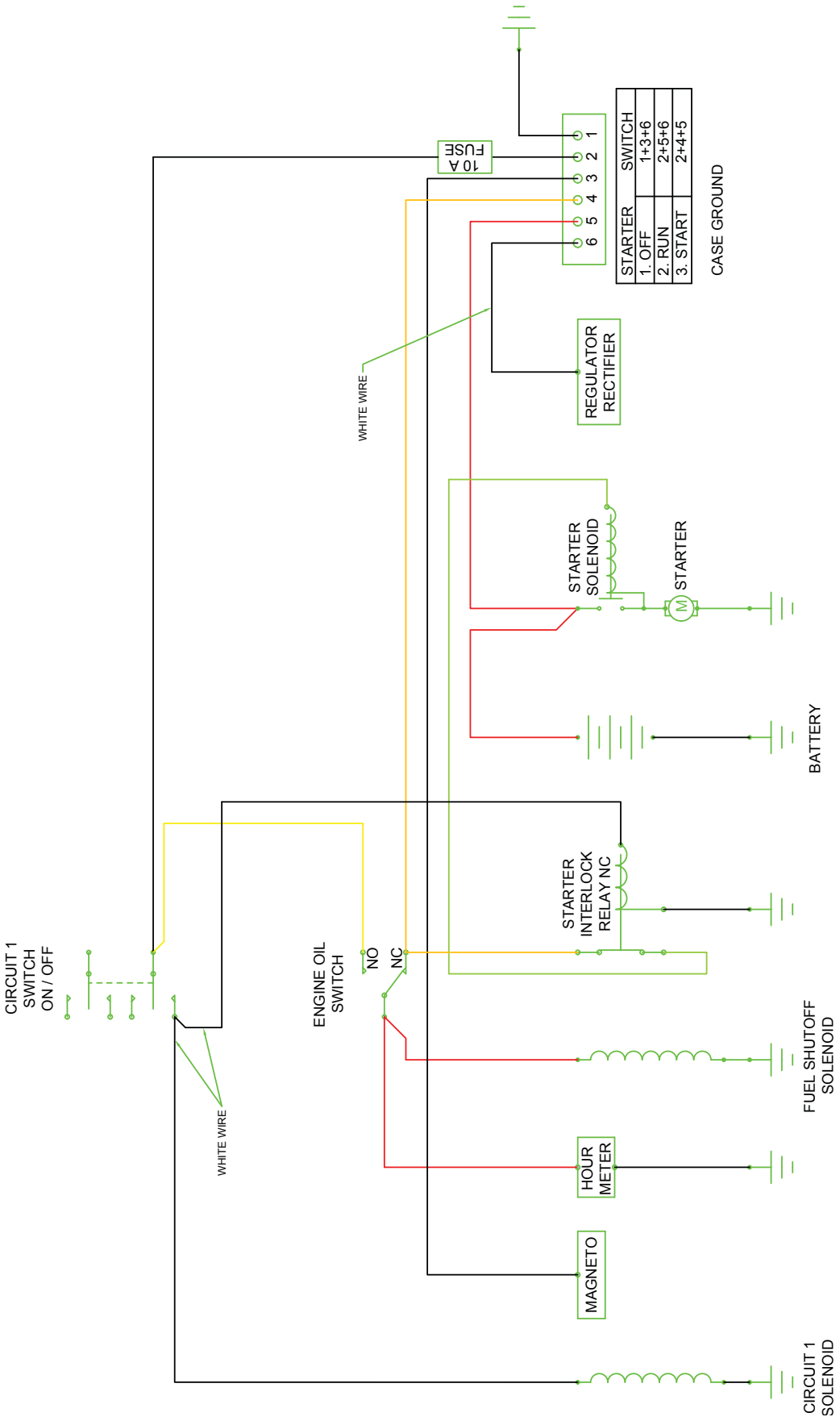

STANLEY

STANLEY®

STANLEY Infrastructure
6430 SE Lake Road
Portland, Oregon 97222 USA
(503) 659-5660 / Fax (503) 652-1780
www.stanleyinfrastructure.com