STANLEY®

HP TWIN8

HYDRAULIC POWER UNIT

USER MANUAL

Safety, Operation and Maintenance

© 2017 Stanley Black & Decker, Inc.
New Britain, CT 06053
U.S.A.
72464 7/2017 Ver. 13

TABLE OF CONTENTS

SAFETY SYMBOLS 4
SAFETY PRECAUTIONS 5
TOOL STICKERS 7
HOSE TYPES 8
HOSE RECOMMENDATIONS 9
HTMA / EHTMA REQUIREMENTS 10
PREPARATION FOR USE 11
OPERATION 12
MAINTENANCE 13
CIRCUIT TESTING 16
TROUBLESHOOTING 17
SPECIFICATIONS 18
ACCESSORIES & FILTERS 19
LOWER FRAME ILLUSTRATION 20
LOWER FRAME PARTS LIST 21
HYDRAULIC GROUP ILLUSTRATION 22
HYDRAULIC GROUP PARTS LIST 23
UPPER FRAME ILLUSTRATION & PARTS LIST 24
HYDRAULIC FLOW 25
CONTROL BLOCK DETAIL 26
HYDRAULIC & FUEL TANKS 27
ELECTRICAL SCHEMATIC 28

IMPORTANT

To fill out a product warranty validation form, and for information on your warranty, visit www.stanleyhydraulics.com and select the Company tab > Warranty.

Note: The warranty validation record must be submitted to validate the warranty.

SERVICING: This manual contains safety, operation and routine maintenance instructions. Stanley Hydraulic Tools recommends that servicing of hydraulic tools, other than routine maintenance, must be performed by an authorized and certified dealer. Please read the following warning.

⚠WARNING

SERIOUS INJURY OR DEATH COULD RESULT FROM THE IMPROPER REPAIR OR SERVICE OF THIS TOOL.

REPAIRS AND / OR SERVICE TO THIS TOOL MUST ONLY BE DONE BY AN AUTHORIZED AND CERTIFIED DEALER.

For the nearest certified dealer, call Stanley Hydraulic Tools at (503) 659-5660 and ask for a Customer Service Representative.

SAFETY SYMBOLS

Safety symbols and signal words, as shown below, are used to emphasize all operator, maintenance and repair actions which, if not strictly followed, could result in a life-threatening situation, bodily injury or damage to equipment.

This is the safety alert symbol. It is used to alert you to potential personal injury hazards. Obey all safety messages that follow this symbol to avoid possible injury or death.

DANGER — This safety alert and signal word indicate an imminently hazardous situation which, if not avoided, will result in death or serious injury.

WARNING — This safety alert and signal word indicate a potentially hazardous situation which, if not avoided, could result in death or serious injury.

CAUTION — This safety alert and signal word indicate a potentially hazardous situation which, if not avoided, could result in death or serious injury.

CAUTION — This signal word indicates a potentially hazardous situation which, if not avoided, may result in property damage.

NOTICE — This signal word indicates a situation which, if not avoided, will result in damage to the equipment.

IMPORTANT — This signal word indicates a situation which, if not avoided, may result in damage to the equipment.

Always observe safety symbols. They are included for your safety and for the protection of the tool.

LOCAL SAFETY REGULATIONS

Enter any local safety regulations here. Keep these instructions in an area accessible to the operator and maintenance personnel.

SAFETY PRECAUTIONS

Tool operators and maintenance personnel must always comply with the safety precautions given in this manual and on the stickers and tags attached to the tool and hose.

These safety precautions are given for your safety. Review them carefully before operating the tool and before performing general maintenance or repairs.

Supervising personnel should develop additional precautions relating to the specific work area and local safety regulations. If so, place the added precautions in the space provided in this manual.

The HP TWIN8 Hydraulic Power Unit will provide safe and dependable service if operated in accordance with the instructions given in this manual. Read and understand this manual and any stickers and tags attached to the tool and hoses before operation. Failure to do so could result in personal injury or equipment damage.

- Operator must start in a work area without bystanders. The operator must be familiar with all prohibited work areas such as excessive slopes and dangerous terrain conditions.
- Establish a training program for all operators to ensure safe operation.
- Do not operate the power unit unless thoroughly trained or under the supervision of an instructor.
- Always wear safety equipment such as goggles, ear protection, breathing protection, head protection and safety shoes at all times when operating the power unit and a hydraulic tool.
- Do not inspect or clean the power unit while it is running. Accidental engagement of the unit can cause serious injury.
- Always use hoses and fittings rated at 2500 psi/172 bar with a 4-to-1 safety factor. Be sure all hose connections are tight.
- Be sure all hoses are connected for correct flow direction to and from the tool being used.
- Do not inspect hoses and fittings for leaks by using bare hands. “Pin-hole” leaks can penetrate the skin.
- **NEVER OPERATE THE POWER UNIT IN A CLOSED SPACE.** Inhalation of engine exhaust can be fatal.
- Do not operate a damaged or improperly adjusted power unit.
- Do not wear loose clothing or unbound long hair when operating the tool. Loose items can become entangled with the tool and cause serious injury.
- Keep all parts of your body away from the working parts of the power unit.
- Keep clear of hot engine exhaust.
- Do not add fuel to the power unit while the power unit is running or is still hot.
- Do not operate the power unit if gasoline odor is present.
- Do not use flammable solvents around the power unit engine.
- Do not operate the power unit within 3.3 ft/1 m of buildings, obstructions or flammable objects.
- Do not reverse tool rotation direction by changing fluid flow direction.
- Allow power unit engine to cool before storing in an enclosed space.
- Always keep critical tool markings, such as labels and warning stickers, legible.
- To avoid personal injury or equipment damage, all tool repair, maintenance and service must only be performed by authorized and properly trained personnel.
- Do not operate the machine on excessive slopes or unstable terrain where “tip over” is a hazard.
- Do not exceed the rated limits of the equipment or use the equipment for applications beyond its design capacity.
- Be aware of surrounding hazards. Noise created by the power unit and the tools it operates may mask early indications of approaching hazards. **Warning:** Hydraulic fluid under pressure could cause skin injection injury. If you are injured by hydraulic fluid, get medical attention immediately.
- Be observant of the hydraulic hoses lying about the work area, they can be a tripping hazard.
- Use proper lifting techniques when handling the power unit and do not over-reach.
- Only use the power unit in well-ventilated areas. **DO NOT** operate in explosive atmospheres, in closed environments or near flammable substances.
- Always be well-rested and mentally alert when operating the power unit and tools. **DO NOT** operate

if affected by medications, drugs or alcohol.

- Keep clear of hot engine parts and exhaust.
- Do not operate tools if oil temperature exceeds 140 °F/60 °C. Operation at high temperatures can cause operator discomfort or injury.
- Disconnect battery before servicing electrical components. Electrocution or burns could result from improper contact.
- Loading and unloading of the power unit is dangerous. Never attempt to load or unload the power unit without loading ramps, loading dock or an over head crane. Loading ramps must be strong enough, have a low angle and correct height. Load and unload the power unit on a level surface. Never attempt to load or unload the power unit if the ramp incline exceeds 15 degrees. Failure to follow these instructions may result in serious injury or death.
- **Warning:** Use of this tool on certain materials could generate dust potentially containing a variety of hazardous substances such as asbestos, silica or lead. Inhalation of dust containing these or other hazardous substances could result in serious injury, cancer or death. Protect yourself and those around you. Research and understand the materials you are cutting. Follow correct safety procedures and comply with all applicable national, state or provisional health and safety regulations relating to them, including, if appropriate arranging for the safe disposal of the materials by a qualified person.

- **Warning:** When using pressure cleaning equipment, do not aim the jet directly at electrical component parts and insulating material. Do not place the water jet directly in the air intake ports. Blow the unit dry before operating.

TOOL STICKERS

LOGO, TWIN8 DECAL P/N-74771

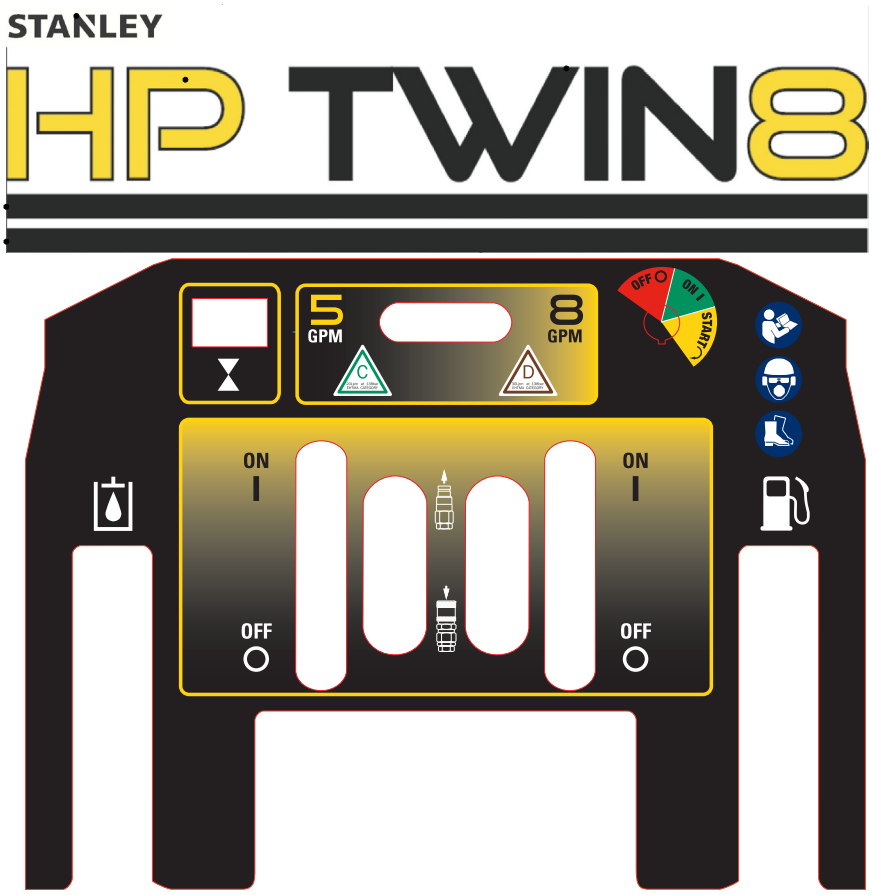

DASH, TWIN8, DECAL P/N-205043

STANLEY®

STANLEY, HYD TANK, DECAL P/N-74770
YELLOW ON CLEAR BACKGROUND

STANLEY®

STANLEY, FUEL TANK DECAL P/N-74706

HP TWIN8

LOGO TWIN8, HYD TANK DECAL P/N-205046

HP TWIN8

LOGO, TWIN8, FUEL TANK DECAL P/N-205045

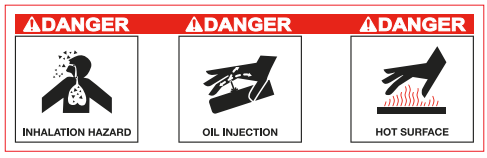

SAFETY, TWIN8, DECAL P/N-205047

HOSE TYPES

The rated working pressure of the hydraulic hose must be equal to or higher than the relief valve setting on the hydraulic system. There are three types of hydraulic hose that meet this requirement and are authorized for use with Stanley Hydraulic Tools. They are:

Certified non-conductive — constructed of thermoplastic or synthetic rubber inner tube, synthetic fiber braid reinforcement, and weather resistant thermoplastic or synthetic rubber cover. *Hose labeled **certified non-conductive** is the only hose authorized for use near electrical conductors.*

Wire-braided (conductive) — constructed of synthetic rubber inner tube, single or double wire braid reinforcement, and weather resistant synthetic rubber cover. *This hose is **conductive** and must never be used near electrical conductors.*

Fabric-braided (not certified or labeled non-conductive) — constructed of thermoplastic or synthetic rubber inner tube, synthetic fiber braid reinforcement, and weather resistant thermoplastic or synthetic rubber cover. *This hose is **not certified non-conductive** and must never be used near electrical conductors.*

HOSE SAFETY TAGS

To help ensure your safety, the following DANGER tags are attached to all hose purchased from Stanley Hydraulic Tools. DO NOT REMOVE THESE TAGS.

If the information on a tag is illegible because of wear or damage, replace the tag immediately. A new tag may be obtained from your Stanley Distributor.

THE TAG SHOWN BELOW IS ATTACHED TO "CERTIFIED NON-CONDUCTIVE" HOSE

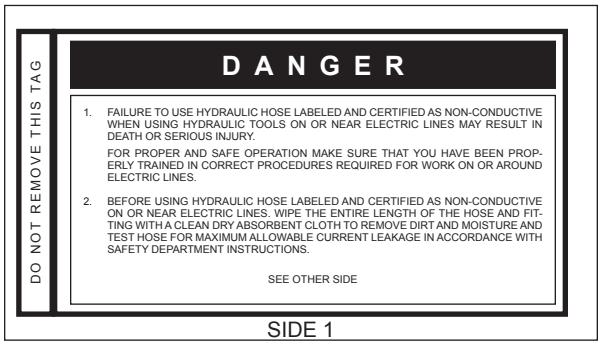

SIDE 1

SIDE 2

(Shown smaller than actual size)

THE TAG SHOWN BELOW IS ATTACHED TO "CONDUCTIVE" HOSE.

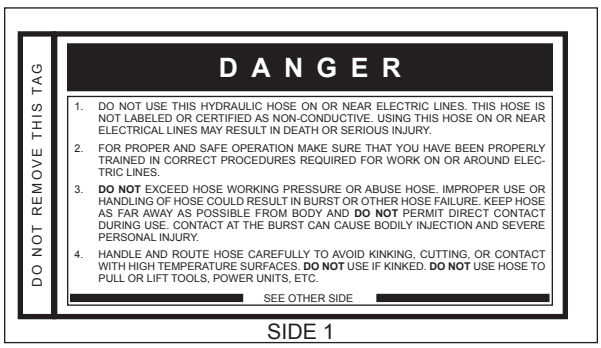

SIDE 1

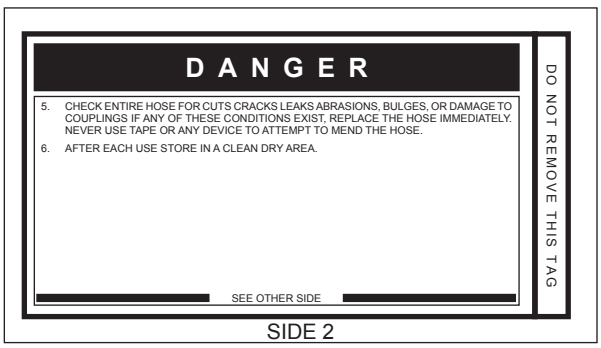

SIDE 2

(Shown smaller than actual size)

Tool to Hydraulic Circuit Hose Recommendations

The chart to the right shows recommended minimum hose diameters for various hose lengths based on gallons per minute (GPM)/ liters per minute (LPM). These recommendations are intended to keep return line pressure (back pressure) to a minimum acceptable level to ensure maximum tool performance.

This chart is intended to be used for hydraulic tool applications only based on Stanley Hydraulic Tools tool operating requirements and should not be used for any other applications.

All hydraulic hose must have at least a rated minimum working pressure equal to the maximum hydraulic system relief valve setting.

All hydraulic hose must meet or exceed specifications as set forth by SAE J517.

Oil Flow		Hose Lengths		Inside Diameter		USE (Press/Return)	Min. Working Pressure	
GPM	LPM	FEET	METERS	INCH	MM		PSI	BAR
Certified Non-Conductive Hose - Fiber Braid - for Utility Bucket Trucks								
4-9	15-34	up to 10	up to 3	3/8	10	Both	2250	155
Conductive Hose - Wire Braid or Fiber Braid -DO NOT USE NEAR ELECTRICAL CONDUCTORS								
4-6	15-23	up to 25	up to 7.5	3/8	10	Both	2500	175
4-6	15-23	26-100	7.5-30	1/2	13	Both	2500	175
5-10.5	19-40	up to 50	up to 15	1/2	13	Both	2500	175
5-10.5	19-40	51-100	15-30	5/8	16	Both	2500	175
5-10.5	19-40	100-300	30-90	5/8	16	Pressure	2500	175
				3/4	19	Return	2500	175
10-13	38-49	up to 50	up to 15	5/8	16	Both	2500	175
10-13	38-49	51-100	15-30	5/8	16	Pressure	2500	175
				3/4	19	Return	2500	175
10-13	38-49	100-200	30-60	3/4	19	Pressure	2500	175
				1	25.4	Return	2500	175
13-16	49-60	up to 25	up to 8	5/8	16	Pressure	2500	175
				3/4	19	Return	2500	175
13-16	49-60	26-100	8-30	3/4	19	Pressure	2500	175
				1	25.4	Return	2500	175

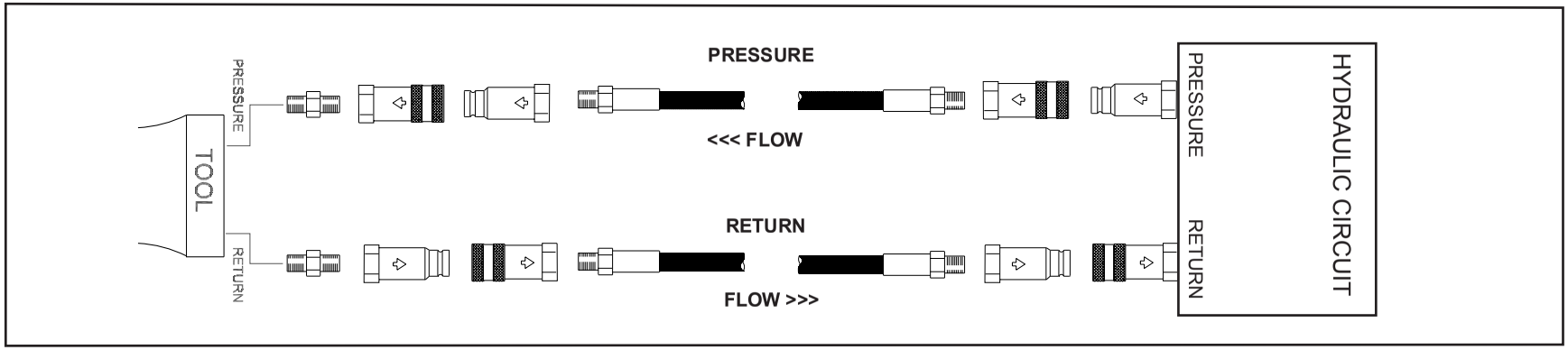

Figure 1. Typical Hose Connections

HTMA / EHTMA REQUIREMENTS

HTMA / EHTMA REQUIREMENTS

HTMA HYDRAULIC SYSTEM REQUIREMENTS	TOOL TYPE TYPE I	TYPE II	TYPE RR	TYPE III
Flow Range	4-6 gpm (15-23 lpm)	7-9 gpm (26-34 lpm)	9-10.5 gpm (34-40 lpm)	11-13 gpm (42-49 lpm)
Nominal Operating Pressure (at the power supply outlet)	1500 psi (103 bar)	1500 psi (103 bar)	1500 psi (103 bar)	1500 psi (103 bar)
System relief valve setting (at the power supply outlet)	2100-2250 psi (145-155 bar)	2100-2250 psi (145-155 bar)	2200-2300 psi (152-159 bar)	2100-2250 psi (145-155 bar)
Maximum back pressure (at tool end of the return hose)	250 psi (17 bar)	250 psi (17 bar)	250 psi (17 bar)	250 psi (17 bar)
Measured at a max. fluid viscosity of: (at min. operating temperature)	400 ssu* (82 centistokes)	400 ssu* (82 centistokes)	400 ssu* (82 centistokes)	400 ssu* (82 centistokes)
Temperature: Sufficient heat rejection capacity to limit max. fluid temperature to: (at max. expected ambient temperature)	140° F (60° C)	140° F (60° C)	140° F (60° C)	140° F (60° C)
Min. cooling capacity at a temperature difference of between ambient and fluid temps	3 hp (2.24 kW) 40° F (22° C)	5 hp (3.73 kW) 40° F (22° C)	6 hp (5.22 kW) 40° F (22° C)	7 hp (4.47 kW) 40° F (22° C)
NOTE: Do not operate the tool at oil temperatures above 140° F (60° C). Operation at higher temperatures can cause operator discomfort at the tool.				
Filter Min. full-flow filtration Sized for flow of at least: (For cold temp. startup and max. dirt-holding capacity)	25 microns 30 gpm (114 lpm)	25 microns 30 gpm (114 lpm)	25 microns 30 gpm (114 lpm)	25 microns 30 gpm (114 lpm)
Hydraulic fluid Petroleum based (premium grade, anti-wear, non-conductive) Viscosity (at min. and max. operating temps)	100-400 ssu*	100-400 ssu* (20-82 centistokes)	100-400 ssu*	100-400 ssu*
NOTE: When choosing hydraulic fluid, the expected oil temperature extremes that will be experienced in service determine the most suitable temperature viscosity characteristics. Hydraulic fluids with a viscosity index over 140 will meet the requirements over a wide range of operating temperatures.				
*SSU = Saybolt Seconds Universal				

EHTMA HYDRAULIC SYSTEM REQUIREMENTS	CLASSIFICATION B (15Lpm at 138bar EHTMA CATEGORY)	C (20Lpm at 138bar EHTMA CATEGORY)	D (30Lpm at 138bar EHTMA CATEGORY)	E (40Lpm at 138bar EHTMA CATEGORY)	F (60Lpm at 138bar EHTMA CATEGORY)
Flow Range	3.5-4.3 gpm (13.5-16.5 lpm)	4.7-5.8 gpm (18-22 lpm)	7.1-8.7 gpm (27-33 lpm)	9.5-11.6 gpm (36-44 lpm)	11.8-14.5 gpm (45-55 lpm)
Nominal Operating Pressure (at the power supply outlet)	1870 psi (129 bar)	1500 psi (103 bar)	1500 psi (103 bar)	1500 psi (103 bar)	1500 psi (103 bar)
System relief valve setting (at the power supply outlet)	2495 psi (172 bar)	2000 psi (138 bar)	2000 psi (138 bar)	2000 psi (138 bar)	2000 psi (138 bar)

NOTE: These are general hydraulic system requirements. See tool specification page for tool specific requirements.

STANLEY

PREPARATION FOR USE

Do not operate the power unit until you have read the engine operating and maintenance instructions manual furnished with the unit.

1. ENGINE CRANKCASE OIL LEVEL

Always check the oil level before starting the engine. Make sure the oil level is at the FULL MARK on the dipstick. Do not overfill. Use detergent oil classified “For Service SF, SG, SH, SJ or higher” as specified in the engine operators manual. Do not use special additives. Outdoor temperatures determine the proper oil viscosity for the engine. Use the chart to select the best viscosity for the outdoor temperature range expected.

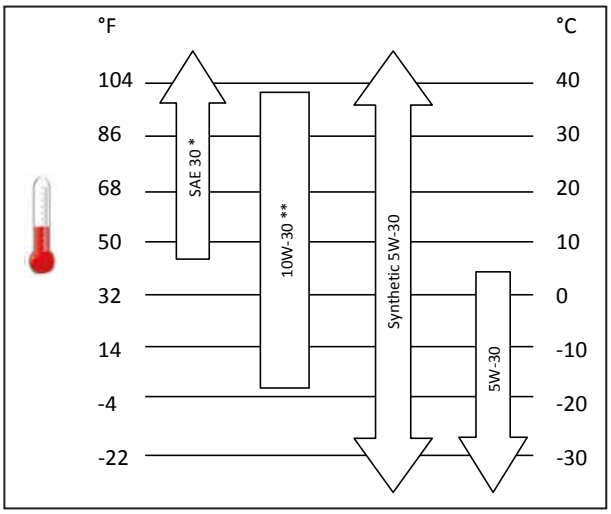

* Below 40°F (4°C) the use of SAE 30 will result in hard starting.

** Above 80°F (27°C) the use of 10W-30 may cause increased oil consumption. Check oil level more frequently.

2. ENGINE FUEL LEVEL

Check the fuel level. If low, fill with clean, fresh unleaded gasoline with a minimum of 87 octane. Gasoline with up to 10% ethanol (gasohol) is acceptable.

3. HYDRAULIC CONNECTIONS

The recommended hose length is 25 ft/8 m with a 1/2 inch/12.7 mm inside diameter. The hoses must have a working pressure rating of at least 2500 psi/175 bar. Each hose end must have male thread ends compatible with HTMA (Hydraulic Tool Manufacturers Associations) quick disconnect fittings (NPT type threads).

QUICK DISCONNECT COUPLERS

HTMA-approved quick disconnect couplings are installed to hydraulic hoses so that the direction of oil flow is always from the male to the female quick disconnect as shown on “Hose Recommendations” on page 9. Quick disconnect couplings and hose fittings are selected so that additional fittings such as reducer or adapter fittings are not required.

If adapter fittings are used, they must be approved steel hydraulic fittings meeting a minimum operating pressure rating of 2500 psi/172 bar. Do not use galvanized pipe fittings or black pipe fittings.

Use thread tape or pipe joint compound when installing quick disconnect couplings to hose or tool fittings. Follow the instructions furnished with the selected thread sealant. **DO NOT OVERTIGHTEN THE FITTINGS.**

3. HYDRAULIC FLUID

RECOMMENDED HYDRAULIC OILS

Below is a list of recommended oils by brand.

Brand	Biodegradable	Description
CITGO	No	Hydurance AW32
AMS Oil	No	HVH 32
Exxon Mobil	No	Univis HVI26*
Exxon Mobil	No	DTE 10 Excel
Shell	No	S2 V 32
Chevron	No	Rando HDZ 32
Conoco Phillips	No	Unax AW-WR-32
Clarion (CITGO)	Yes	Green Bio 32
Exxon Mobil	Yes	EAL 224H
Chevron	Yes	Clarity AW32
Terresolve	Yes	Envirologic 132
Shell	Yes	Naturelle HF-E-32

*Recommended for extreme cold temperatures

5. BATTERY

The supplied 12-Volt DC battery is a sealed non-spillable, maintenance-free battery and is fully charged.

Make sure the battery cables are tight and charging circuit functions are operating properly.

NOTICE

A fully charged battery should read 12.8V -13.0V. Overcharging can harm your battery beyond recovery. When using an automatic charger, refer to the charger manufacturer's instructions.

NOTICE

If the engine runs out of gas or dies during operation and the ignition switch is left in the ON or RUN position as this will drain the battery. Make sure the ignition switch is returned to the OFF position.

COUPLERS (HOSE CONNECTIONS)

Top Male Quick Disconnect Couplers (Pressure Fluid Out)

Bottom Female Quick Disconnect Couplers (Return Fluid In)

Facing the control panel, the top (2) male couplers are the PRESSURE FLUID OUT fittings. The bottom (2) female quick disconnect couplers are the RETURN FLUID IN. Their are two independent circuits, one on the left and one on the right, each controlled by the adjacent lever.

CONTROLS (DUAL CIRCUIT)

Throttle Control Lever

Starter Switch

Flow Control Lever(s) In Off Position

When the throttle control lever is in the far left position, it will produce 5 GPM to both circuits. With the lever in the far right position will produce 8 GPM to both circuits. This allows two tools that can run simultaneously at 5 or 8 GPM.

The flow control levers, when turned "ON" (up position), turns on flow.

STARTUP

1. Before starting the engine, check the engine oil and hydraulic fluid level.
2. Check to make sure the flow Control levers are in the OFF position (Down). The power unit will not start if the levers are in the "UP" position (ON).
3. Connect hoses and the tool as described in "Hose Recommendations" on page 9.
4. It is not necessary to choke the engine. The engine is equipped with an electronic fuel management system and does not have a manual choke.
5. Set the throttle control lever to the left (5-GPM) setting. Once the unit starts and is warmed-up the lever can be moved to the 8-GPM setting if desired.
6. Turn the Ignition Switch to the START position. After the engine starts, release the switch.
7. Allow the engine to warm up.
8. Turn on the flow to the tool by lifting the flow control levers up into the "ON" position, lift both levers if running two circuits.

SHUTDOWN

1. Ensure the flow control levers are in the OFF position (Down).
2. Move the Ignition Switch to the OFF position.

STANLEY

MAINTENANCE

COLD WEATHER STARTUP

1. Use the procedures described under “STARTUP” and then follow the procedure below.
2. Hydraulic fluids are thicker in cold weather. Therefore, it is recommended that the engine be run at low idle long enough to bring the fluid temperature up to a minimum of 50 °F/10 °C.
3. If the tools and tool hoses are cold, it is recommended to allow hydraulic fluid to circulate through the tool hoses until warm, before using the tool.

ENGINE MAINTENANCE

Follow the maintenance schedule and general maintenance instructions and emissions control maintenance in the engine operators manual furnished with the power unit.

Fuel system emissions maintenance:

- Check the fuel system emissions components once a year to verify that the components are in good condition and do not show signs of leakage. If leakage is found, replace part.
- Check fuel lines, tank, cap and fittings frequently for cracks or leaks. Replace if necessary.
- Clean the fuel cap area of dirt and debris.
- Replacement parts must be the same and installed in the same position as the original parts.

HYDRAULIC SYSTEM MAINTENANCE

- Check hydraulic fluid level daily. Add fluid per specifications in this manual. (See “3. HYDRAULIC FLUID” on page 11.)
- Remove condensed moisture from the hydraulic fluid by pumping the hydraulic fluid into a 5 gal/20 L. container through the pressure hose. Make sure the engine is at idle when performing this procedure. When the hydraulic reservoir is empty turn the engine off immediately.
- Allow the fluid to sit long enough for the water to settle to the bottom of the container. Slowly pour the fluid back into the hydraulic tank, avoiding the water at the bottom of the container.
- Each day, check hydraulic lines and fittings for leaks, kinks, etc. Do not use your hand to perform this check.
- Change the hydraulic filter element every 200 hours of operation. Change more often if cold, moist or dusty conditions exist.
- Check oil cooler for debris. Remove debris with air pressure.

BATTERY MAINTENANCE

- If the power unit is not in use for two or more months, check the battery once a month and charge if the battery voltage is below 12.5V. Charge at 1.3A for 5-10 hours.
- If the battery voltage is below 12.0V, charge at 1.3A for 12-18 hours, let the battery sit for 1-2 hours and check the voltage. If the voltage is not 12.5V or greater, replace the battery.
- Always charge using a charger as rated as close to 1.3A as possible.
- Checking battery voltage and charging can be done through the 12V marine plug on the battery cover when using an appropriate adapter.

STORAGE

- Clean the unit thoroughly before storage. Do not use water pressure.
- Always store the unit in a clean and dry facility.
- If the unit will be stored for a prolonged period (over 30 days), add a fuel additive to the fuel tank to prevent the fuel from gumming. Run engine for 2 minutes to circulate the additive throughout the fuel system.

⚠WARNING

When storing fuel or equipment with fuel in the tank, store away from appliances that have pilot lights or other ignition sources as they can ignite fuel vapors.

- Replace crankcase oil with new oil.
- Remove spark plugs and pour approximately 1 ounce (30 ml) of engine oil into each cylinder. Replace spark plugs and crank the engine slowly to distribute the oil.
- Check hydraulic reservoir for water. If water is found, change the oil and circulate it through the tool hose and tool. (See “HYDRAULIC SYSTEM MAINTENANCE” on page 13).
- Disconnect tool hoses.

MAINTENANCE

Standard Maintenance Schedule

	Hours	Daily	5	25	50	75	100	125	150	175	200
Engine	Foam Air Pre-Cleaner			C	I	I	R	I	I	I	R
	Paper Air Filter			C			R				R
	In-line Fuel Filter										R
	Spark Plugs (Gap-0.030 in (0.76 mm)						R				R
	Engine Oil Filter		R		R		R		R		R
	Engine Oil		R		R		R		R		R
	Engine Oil Level	I									
	Remove Dirt & Debris With Brush	I									
	Clean Air Cooling System (don't use water)						C				C
Hydraulics	Hydraulic Fluid Level	I									
	Hydraulic Fluid										R
	Remove Condensed Moisture						R				R
	Check For Leaks, Kinks, etc.	I									
	Hydraulic Fluid Filter				I		I		I		R
	Clean Hydraulic Fluid Cooler						C				C
	Relief Valve Settings				I		I		I		I

Heavy Duty Maintenance Schedule

	Hours	Daily	5	25	50	75	100	125	150	175	200
Engine	Foam Air Pre-Cleaner			C*	R	I	R	I	R	I	R
	Paper Air Filter			C*	R		R		R		R
	In-line Fuel Filter										R
	Spark Plugs (Gap-0.030 in (0.76 mm)				R		R		R		R
	Engine Oil Filter		R	R	R	R	R	R	R	R	R
	Engine Oil		R	R	R	R	R	R	R	R	R
	Engine Oil Level	I									
	Remove Dirt & Debris With Brush	I									
	Clean Air Cooling System (don't use water)				C		C		C		C
Hydraulics	Hydraulic Fluid Level	I									
	Hydraulic Fluid										R
	Remove Condensed Moisture				R		R		R		R
	Check For Leaks, Kinks, etc.	I									
	Hydraulic Fluid Filter				I		R		I		R
	Clean Hydraulic Fluid Cooler	**			C		C		C		C
	Relief Valve Settings				I		I		I		I

C Clean (* In dusty conditions or when airborne debris is present, clean more often).

I Inspect (** In dusty conditions or when airborne debris is present, inspect the back side of cooler often).

R Replace

For additional maintenance information see the Briggs & Stratton engine operator's manual that was supplied with the power unit.

STANLEY

MAINTENANCE

SEE page 19 FOR REPLACEMENT FILTER PART NUMBERS

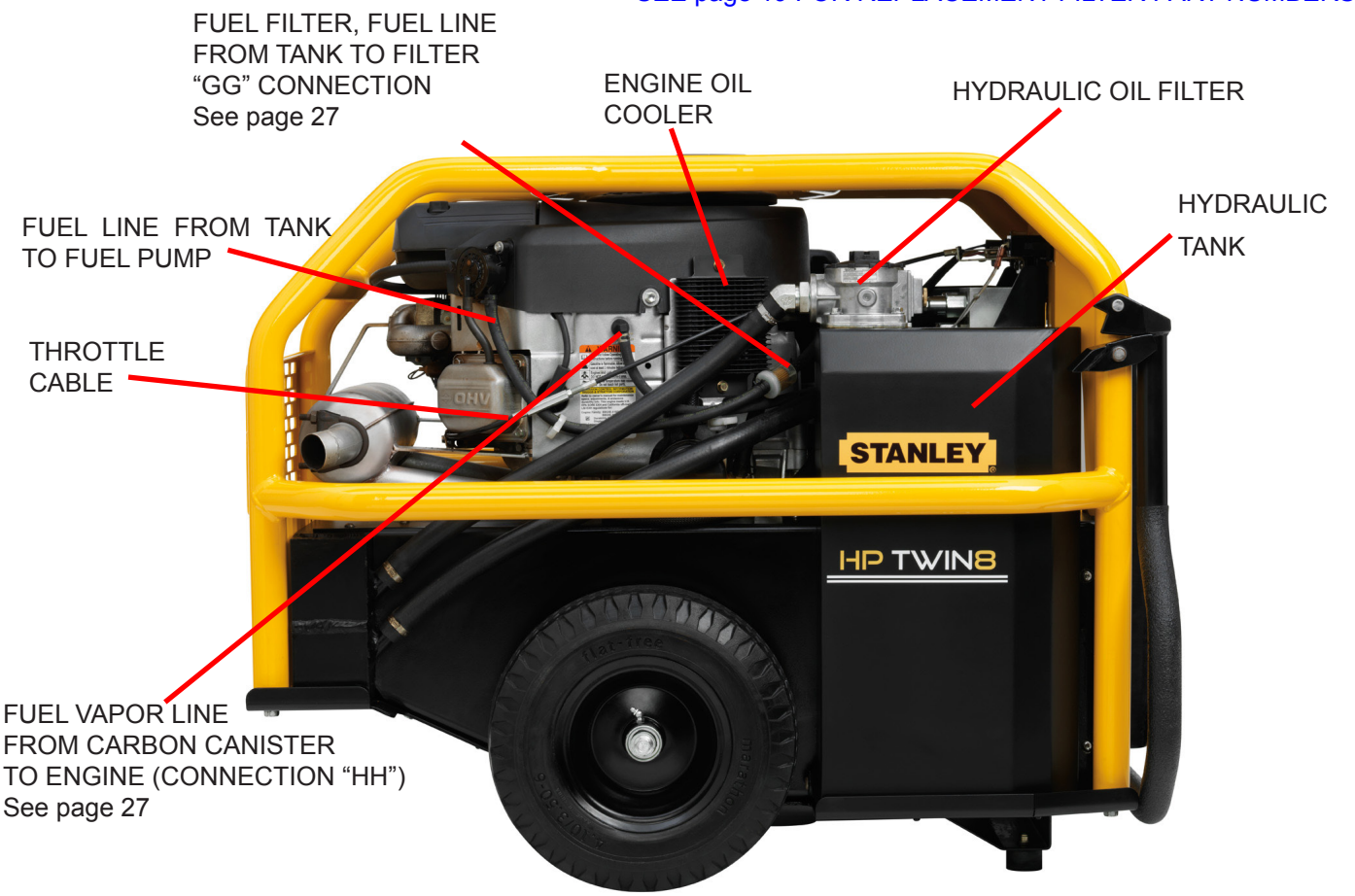

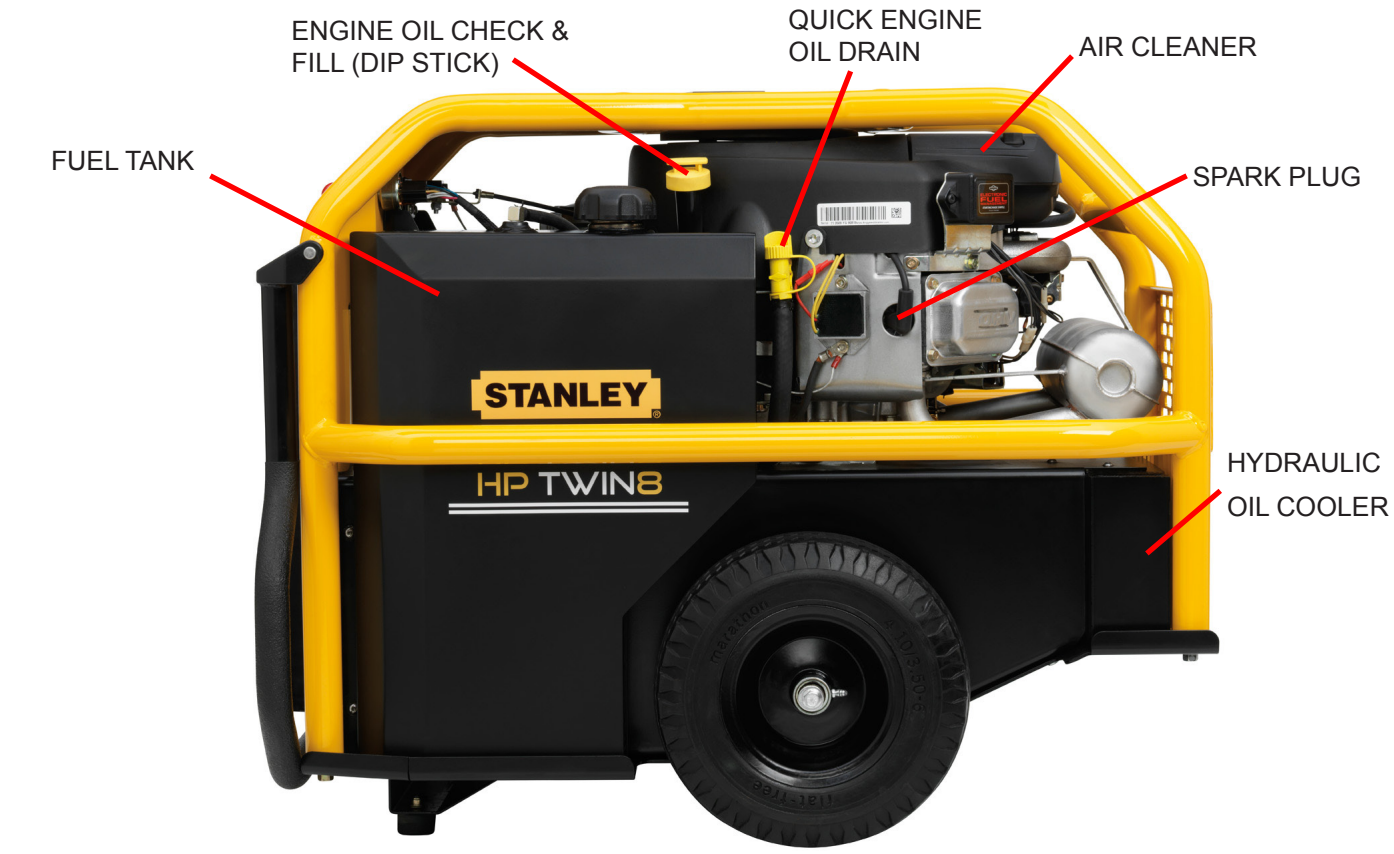

CIRCUIT TESTING

GENERAL

Tests and adjustments should be performed periodically to ensure the power unit is operating at maximum efficiency. Use a calibrated flow and pressure tester. This tester can be used to isolate problems in both the engine and hydraulic system prior to any power unit disassembly.

TESTING THE HYDRAULIC CIRCUIT

The following tests can be performed to ensure that the hydraulic pump is supplying the correct flow and pressure and that the system relief valve is operating properly.

During these tests, make sure the engine is warm and operating smoothly. If test results are not as specified, refer to the troubleshooting table in this section for possible causes.

TESTING THE 5 OR 8 GPM CIRCUIT

To test the circuit, proceed as follows:

1. Install a calibrated flow and pressure tester across the two hose ends (where the tool would normally be connected).
2. Set both flow control levers to the OFF (down) position.
3. Set the throttle control lever to the far left for 5 GPM, after the engine is started you can leave the lever in this position if you are testing the 5 GPM circuit or move the lever to the far right to test the 8 GPM circuit.
4. Check that the tester restrictor valve is fully open (counterclockwise) on the flow and pressure tester.
5. Start the engine and allow it to run until warm.
6. With the throttle control in the far left position, the 5-GPM circuit can be tested, or moving the lever to the far right will allow testing the 8-GPM circuit.
    a. 5-GPM Range 4-6 GPM/15-23 LPM
    b. 8-GPM Range 7-9 GPM/26.5-34 LPM
7. Slowly turn the restrictor valve clockwise while watching the pressure gauge. The flow rate shown above in step 6 should stay at the selected flow range.
8. When the pressure reaches 2100–2200 psi/145–152 bar, the relief valve should begin to open. The pressure at which the relief valve just begins to open is commonly referred to as the “cracking pressure”. At the “cracking pressure,” the flow rate should start to drop because the relief valve is allowing fluid to bypass to the hydraulic reservoir. The “cracking pressure” is preset at the factory and if it is not within the above range (2100-2200) psi, the relief valve must be re-set as follows: The relief valves are located on the control block which is directly behind the couplers on the dash panel (See item 10, page 22) for location. Use a wrench to loosen the nut on the relief valve.
9. Use an Allen wrench to adjust the relief valve. Turn clockwise to raise the pressure and counterclockwise to reduce the pressure. Tighten the nut and retest.
10. Check both the 5 and 8 GPM flow settings and then follow the same procedure to test the other circuit (each circuit has its own relief valve).

TROUBLESHOOTING

Problem	Cause	Solution
Engine will not start	Battery not connected.	Attach battery cables, check wires.
	Weak battery.	Test battery, charge or replace.
	No fuel.	Add fuel.
	Fuel filter plugged.	Replace fuel filter.
	Defective spark plugs.	Remove plugs, check gap, clean or replace.
	Low Engine Oil	Check Oil Level
	Flow Control Levers in the “ON” position.	Move the levers to the off position.
Fluid blowing out of fluid reservoir vent.	Hydraulic tank overfilled.	Correct the fluid level.
	Pump suction leak.	Check suction connections. Tighten if necessary.
Hydraulic tool won’t operate.	Flow control lever(s) not in the (ON) position.	Check that the flow control lever(s) are in the ON position.
	Incorrect hose connection to tool.	Make sure the tool hose circuit goes from left (pressure) fitting to tool and back to the right fitting (return). Fluid always flows from the male to female fittings.
	Quick disconnect fittings defective.	Detach from hose, connect set together and check for free flow.
	Hydraulic fluid level low.	Check for correct fluid level. Fill using the recommended fluid.
	Relief valve stuck open.	Adjust or replace valve.
	Suction hose kinked.	Make sure suction hose from fluid reservoir to pump inlet has a smooth curve.
	Tool is defective.	Refer to tool manual.

SPECIFICATIONS

HP TWIN8 SPECIFICATIONS

Engine: ..... 27 hp OHV, Briggs & Stratton Engine

Output Capacity (Dual 5 or Dual 8 Circuits) ..... Two 5 GPM/20 LPM Circuits or Two 8 GPM/30 LPM Circuits

Length:..... 37.5 in./95.25 cm
Width: ..... 25.75 in./65.4 cm
Height: 30 in./76.2cm

Weight (Wet): .....360 lbs/163 kg

Fuel Tank Capacity: ..... 4.7 gal./17.8 ltr
Estimated Gas Consumption Per Hour ..... 2.5 gal/9.4 ltr
Hydraulic Reservoir Capacity: ..... 3.2 gal./12.1 ltr

Relief Valve “Crack” Setting..... 2100 psi/145 bar
Full Relief Setting ..... 2500 psi/172 bar
Nominal Pressure ..... 1500 psi/103 bar
Max Pressure ..... 2000 psi/138 bar

Circuit Type..... Open Center
HTMA/EHTMA Category ..... Type 1 and 2

POWER UNITS & GAS/FUEL DRIVEN EQUIPMENT: A1. Federal Emission Component Compliance 40CFR part 1060.120 Stanley warrants all fuel system emission components for 2 years from the date of original purchase provided there has been no abuse, neglect, modifications, or improper maintenance.

Components covered. The emission-related warranty covers all components whose failure would increase the evaporative emissions. Your emission-related warranty does not cover components whose failure would not increase evaporative emissions. Coverage under this warranty extends only to the following parts; fuel tank, fuel cap, fuel hose and vapor hose from the fuel tank to the engine and any connectors that are apart of the fuel system.

The equipment is designed, built, and equipped so it conforms at the time of sale to the ultimate purchaser and each subsequent purchaser and is in compliance with 40 C.F.R. 1060.120 standards. The equipment is free from defects in materials and workmanship that may keep it from meeting these requirements.

ACCESSORIES & FILTERS

ACCESSORIES

Coupler Male, Parker SAE.....72398
Coupler Female, Parker SAE.....72397
Coupler Set Male & Female, Parker SAE.....72396
Flow and Pressure Tester.....04182
Hose Assy, 50 ft., with couplers 31848
Hose Assy, 25 ft., with couplers 31972

FILTERS

MODEL	ENGINE			HYDRAULIC OIL FILTER
	OIL FILTER	AIR FILTER	FUEL FILTER	
HP28B02	18384	205053	205057	40408

KIT, FRAME/ TANKS/BRACKETS (P/N-212797)

INCLUDES ITEMS AT RIGHT AND PICTURED BELOW.

ITEM	PART NO	QTY.	DESCRIPTION
1	202717	1	CASTING HANDLE RELEASE
2	202725	1	SKID PLATE, POWER UNIT
3	202726	1	AXLE BRACE, POWER UNIT
4	202731	1	ASSEMBLY, LOWER FRAME
5	203034	1	TIEDOWN, BATTERY
6	203038	1	ASSY, ROTATION STOP
7	203040	1	ASSY, GRILL, AIR INTAKE
8	203046	1	ASSY, TORQUE ARM
9	203254	1	SUPPORT FOOT ASEMBLY
10	204841	1	BATTERY COVER, 12V PLUG
11	204842	1	ASSEMBLY, FUEL TANK
12	206055	1	ASSY, BRACKET, CARBON CANISTER
13	207988	1	BRACKET, TANK MOUNT
14	207998	1	ASSEMBLY, HYD TANK
15	212798	1	ASSY, UPPER, COMPLETE

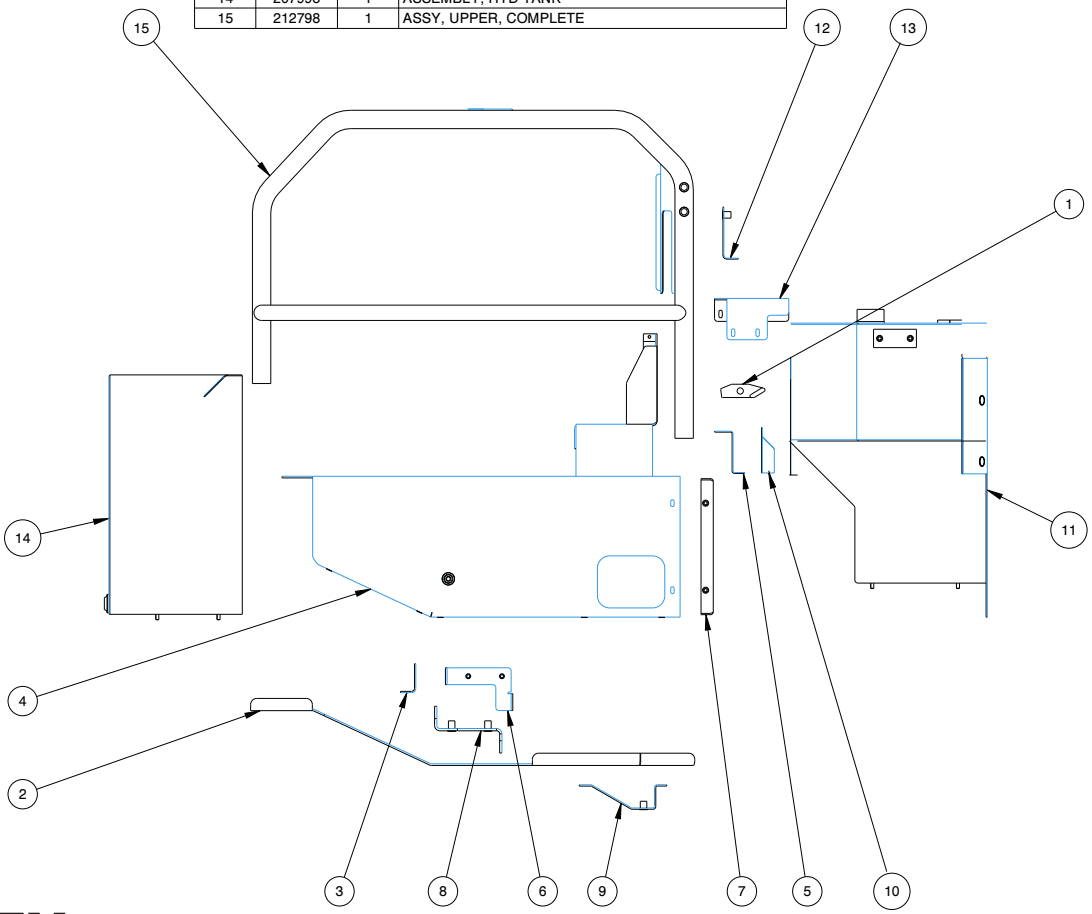

LOWER FRAME ILLUSTRATION

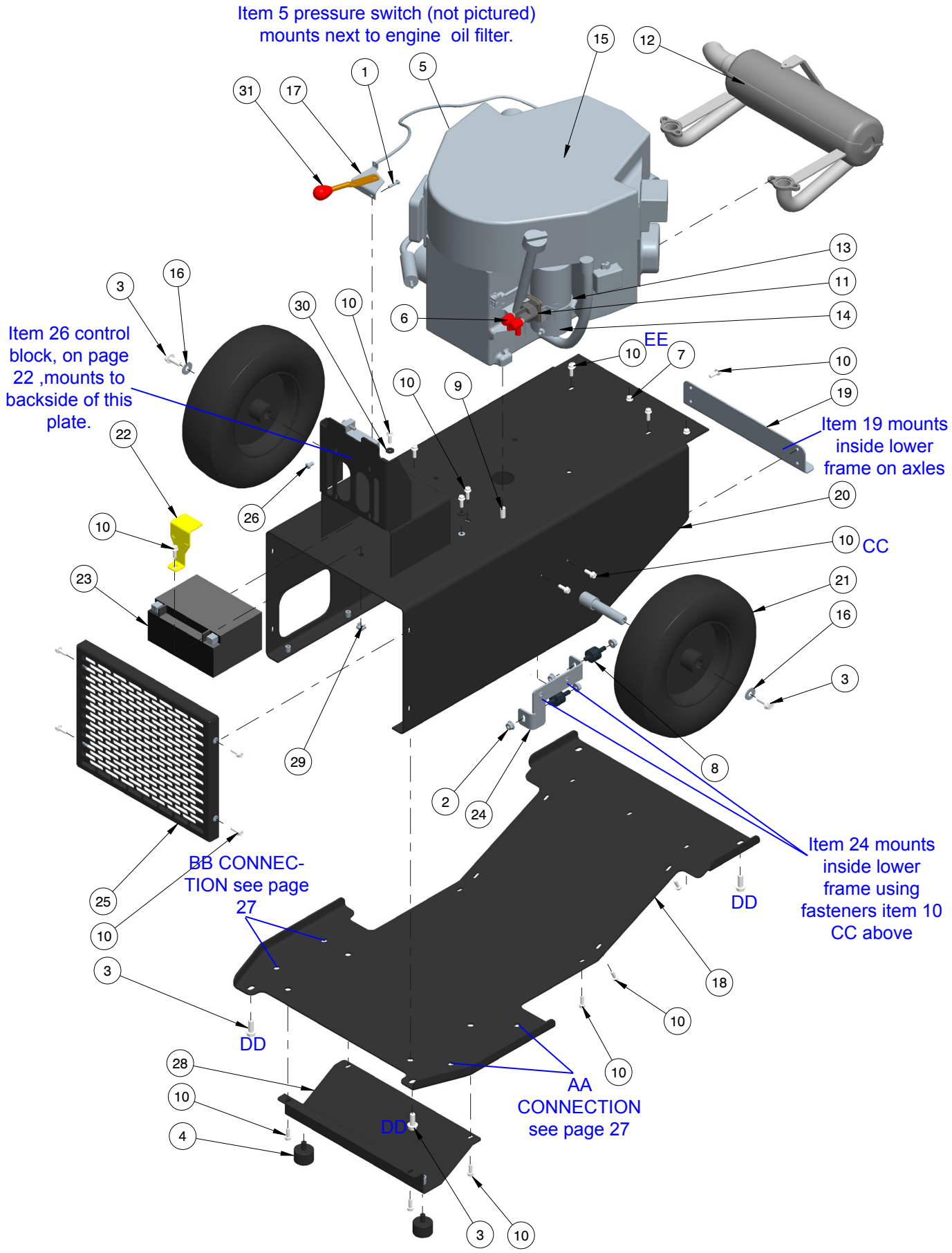

STANLEY

LOWER FRAME PARTS LIST

ITEM	P/N	QTY	DESCRIPTION
1	12470	2	HHCS 10-24UNCX0.875
2	12787	4	FLANGE NUT 5/16-18
3	19534	6	HEX FLANGE BOLT 3/8-16 X 1
4	21713	2	VIBRATION MOUNT
5	31765	1	PRESSURE SWITCH
6	40369	2	WIRE BOOT
7	59074	6	HEX FLANGE BOLT 1/4-20 X 1/2
8	67511	2	RUBBER MOUNT
9	71937	4	HEX FLNG BOLT 3/8-16 X 1
10	71939	28	HEX FLANGE BOLT 1/4-20 X 3/4
11	72402	1	STARTER SOLENOID
12	72403	1	MUFFLER
13	72412	1	CLAMP 2.5 - 3.5 IN
14	72413	1	SOLENOID GROUND STRAP
15	72448	1	BRIGGS M49 27-HP
16	371067	2	WASHER 3/8" I.D.
17	208887	1	THROTTLE CABLE ASSY
18	202725	1	SKID PLATE, POWER UNIT
19	202726	1	AXLE BRACE, POWER UNIT
20	202731	1	ASSEMBLY, LOWER FRAME
21	203031	2	TIRE/WHEEL 4.10/3.50-6 FF
22	203034	1	TIEDOWN, BATTERY
23	203036	1	BATTERY, SEALED, 12V, 13AH
24	203038	1	ASSY, ROTATION STOP
25	203040	1	ASSY, GRILL, AIR INTAKE
26	203222	4	CAPSCREW 1/4-20UNCX1/2
28	203254	1	SUPPORT FOOT ASSEMBLY
29	203411	1	CLIP NUT 1/4-20 .125-.156 GRIP
30	204331	2	WASHER 1/4 NEOPRENE
31	204332	1	KNOB, TAPERED, RED
32	72439	1	WIRE HARNESS (NOT PICTURED)
33	35395	1	WIRE ASSY 6 AWG RED 24 in. NOT SHOWN
34	72453	1	WIRE ASSY 6 AWG BLACK 35 in. NOT SHOWN
35	72454	1	WIRE ASSY 6 AWG RED 5 in. NOT SHOWN
36	212797	1	KIT FRAME/TANK/BRACKETS

NOTE: Kit, Frame/Tank/Brackets P/N-212797
Includes the Following items:
From page 20 - (Items 18, 19, 20, 22, 24, 25 & 28)
From page 22 - (item 25)
From page 24 - (Item 3, 5 and 7)
From page 26 - (Item 52)
From page 27 - (Items 7, 15, & 18)

KIT, FRAME/ TANKS/BRKTS (P/N-212797) INCLUDES ITEMS AT RIGHT AND PICTURED BELOW.

ITEM	PART NO	QTY.	DESCRIPTION
1	202717	1	CASTING HANDLE RELEASE
2	202725	1	SKID PLATE, POWER UNIT
3	202726	1	AXLE BRACE, POWER UNIT
4	202731	1	ASSEMBLY, LOWER FRAME
5	203034	1	TIEDOWN, BATTERY
6	203038	1	ASSY, ROTATION STOP
7	203040	1	ASSY, GRILL, AIR INTAKE
8	203046	1	ASSY, TORQUE ARM
9	203254	1	SUPPORT FOOT ASEMBLY
10	204841	1	BATTERY COVER, 12V PLUG
11	204542	1	ASSEMBLY, FUEL TANK
12	206055	1	ASSY, BRACKET, CARBON CANISTER
13	207988	1	BRACKET, TANK MOUNT
14	207998	1	ASSEMBLY, HYD TANK
15	212798	1	ASSY, UPPER, COMPLETE

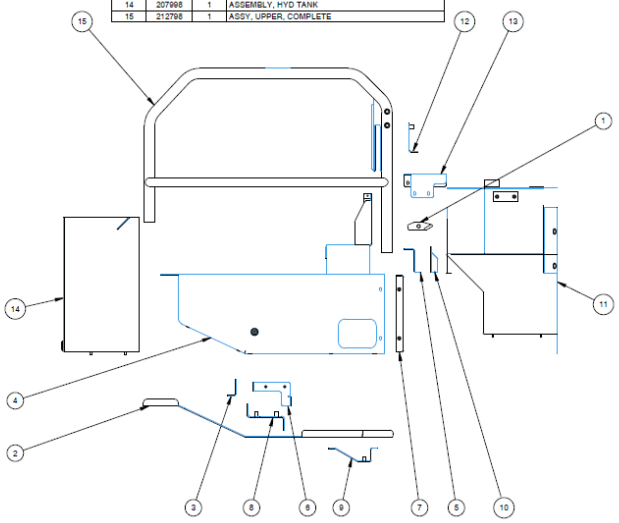

HYDRAULIC GROUP ILLUSTRATION

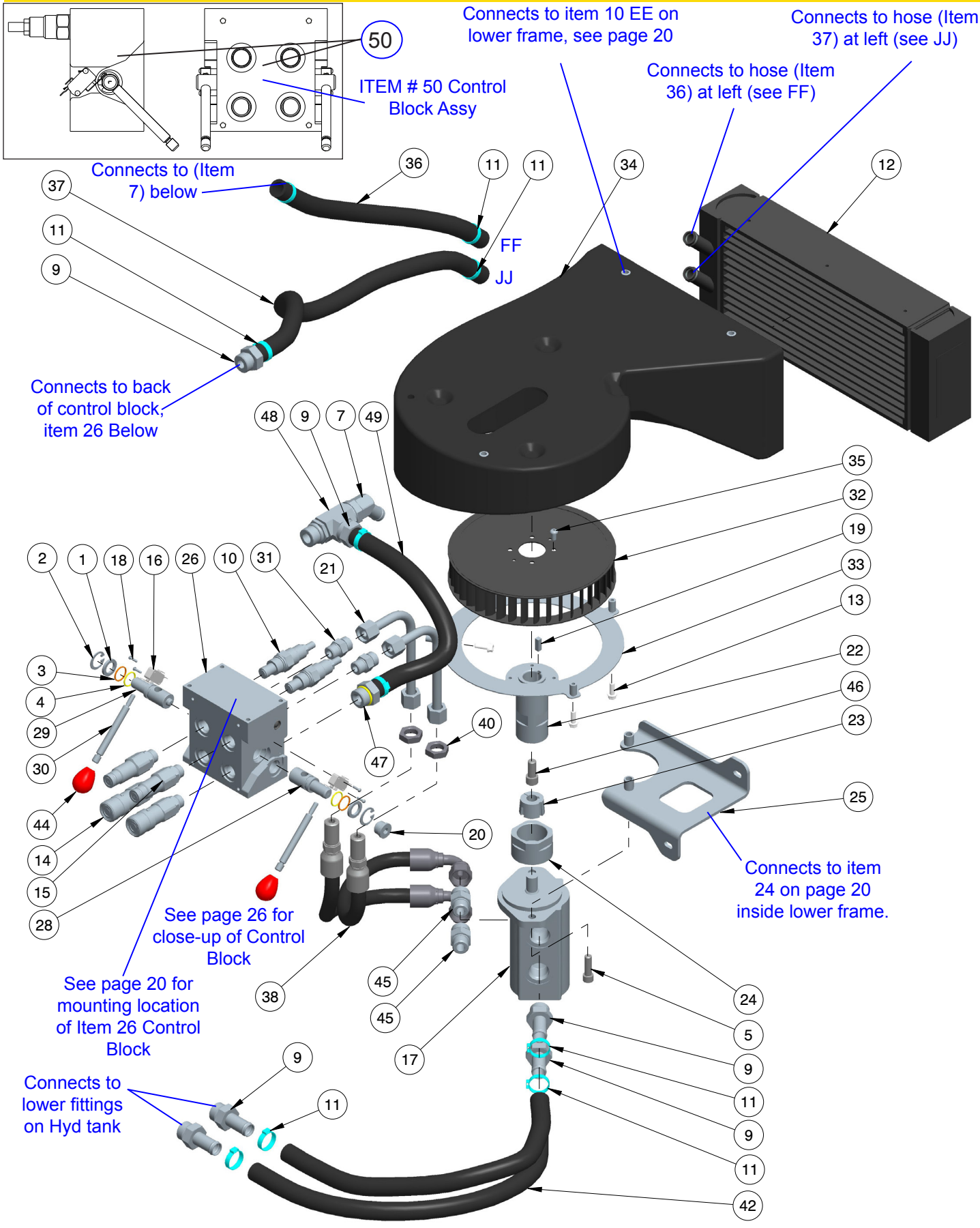

STANLEY

HYDRAULIC GROUP PARTS LIST

ITEM	P/N	QTY	DESCRIPTION
1	04216	2	WASHER
2	04313	2	RETAINING RING
3	06988	2	BACK-UP RING -018
4	06989	2	O-RING
5	10793	2	HSHCS 3/8-16 X 1-1/4
7	40364	1	ELBOW 45 3/4 SAE TO 3/4 BARB
9	59104	6	HOSE BARB 12SAE 3/4 HOSE
10	59131	2	RELIEF VALVE
11	62199	10	HOSE CLAMP
12	71908	1	OIL COOLER
13			PARTS NO LONGER USED
14	72397	2	COUPLER FEMALE, PARKER
15	72398	2	COUPLER MALE, PARKER
16	72414	2	MICRO LIMIT SWITCH
17	72425	1	HYDRAULIC PUMP, DUAL
18	72455	4	CAPSCREW 4-40 x1/2 HSBH
19	72521	1	SQUARE KEY-.25 X .75
20	350237	1	HOLLOW HEX PLUG - 8 SAE
21	202740	2	ASSY, MANIFOLD TUBE
22	207647	1	COUPLER, PUMP/FAN (IF ORDERING COUPLER MUST PURCHASE 207647 WHICH INCLUDES ITEMS 32 & 35)
23	203025	1	BUSHING, TAPER LOCK, 5/8"
24	203026	1	NUT, COUPLER, PUMP/FAN
25	203046	1	ASSY, TORQUE ARM
26	203049	1	CONTROL BLOCK, DUAL (SEE NOTE FOR COMPLETE ASSEMBLY)
28	203052	1	SPOOL, ON-OFF, RH
29	203053	1	SPOOL, ON-OFF, LH
30	203054	2	ROD, ON-OFF SPOOL
31	203063	2	CONNECTOR, -8 SAE-1/2 ORFS
32	207647	1	BLOWER WHEEL, (IF ORDERING BLOWER WHEEL MUST PURCHASE 207647 WHICH INCLUDES ITEMS 22 & 35)
33			PART NO LONGER USED
34	203067	1	ASSY, HOUSING, BLOWER, 9"
ITEM	P/N	QTY	DESCRIPTION
35	203222	4	CAPSCREW 1/4-20UNCX1/2
36	203232	1	HOSE, COOLER-FILTER 04306X20.25
37	203233	1	HOSE, COOLER-BLOCK 04306X30.00
38	203245	2	HOSE, PRESSURE, PUMP-BLKHD
40	203246	2	JAM NUT
42	203247	2	HOSE TANK-PUMP 04306X21.00
44	204332	2	KNOB, TAPERED, RED
45	204538	2	CONNECTOR, -10 SAE-5/8
46	204539	1	HSHCS 7/16-20 X 1.00
47	204808	1	VALVE ASSY, ATM
48	204839	1	TEE, RUN, -12 SAE
49	204840	1	HOSE, BLOCK-FILTER 04306X14.5
50	203051	1	CONTROL BLOCK ASSY

NOTE:

CONTROL BLOCK ASSEMBLY P/N-203051 (INCLUDES THE FOLLOWING)

Item 1 thru 4, 10, 16, 18, 26, 28 thru 30.

COUPLER SET 72396 (INCLUDES MALE AND FEMALE)

UPPER FRAME ILLUSTRATION & PARTS LIST

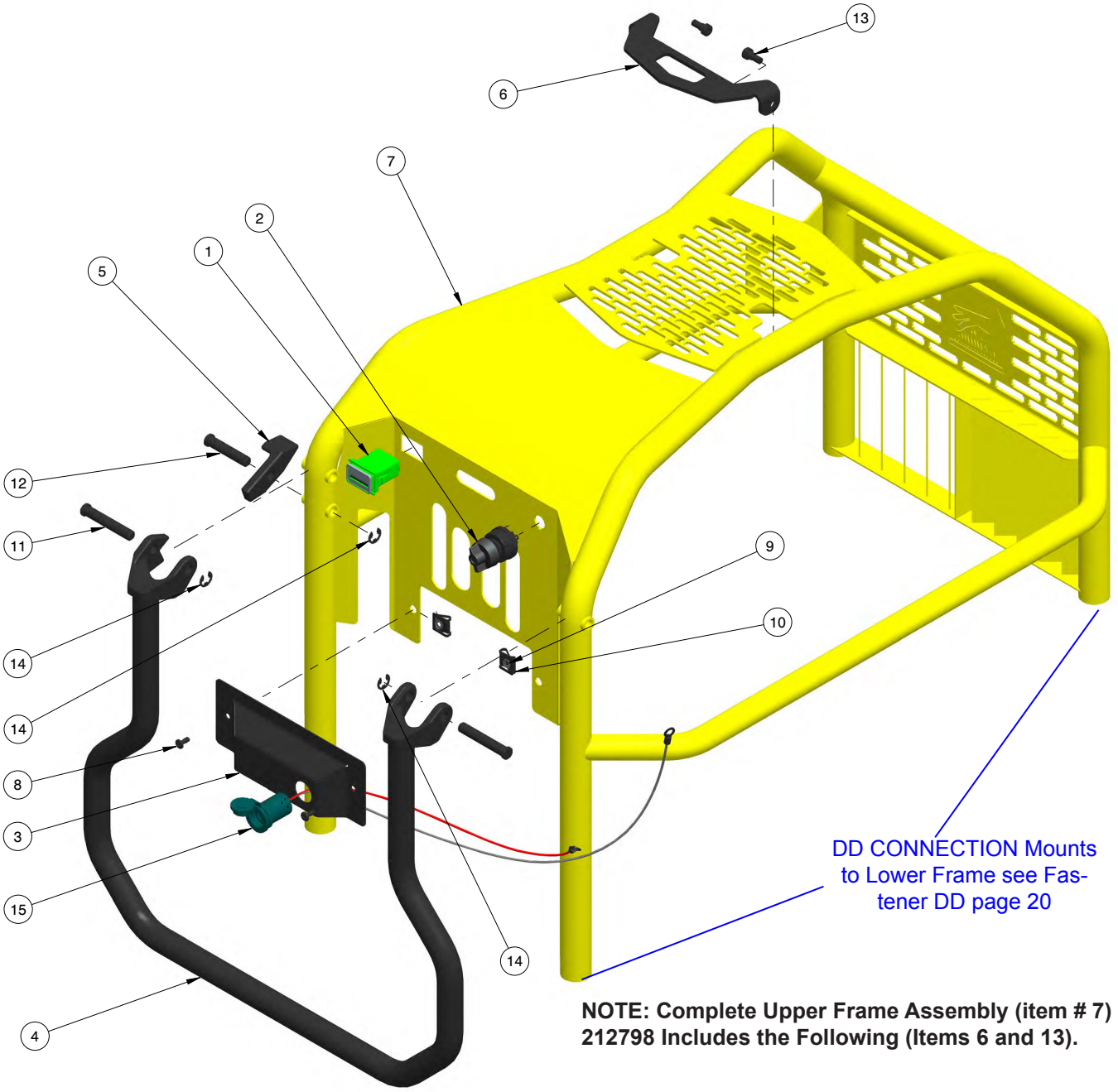

NOTE: Complete Upper Frame Assembly (item # 7) P/N-212798 Includes the Following (Items 6 and 13).

ITEM	P/N	QTY	DESCRIPTION
1	60946	1	HOUR METER
2	67899	1	ROTARY SWITCH & KNOB
3	204841	1	BATTERY COVER
4	202714	1	HANDLE, ASSEMBLY
5	202717	1	HANDLE RELEASE
6	202723	1	LIFT BRACKET
7	212798	1	UPPER FRAME ASSEMBLY Includes the Following (Item 6 and 13).

ITEM	P/N	QTY	DESCRIPTION
8	203228	2	FASTENER, 1/4 TURN, 6MM
9	203229	2	RETAINER, 1/4 TURN, 6MM
10	203231	2	RECEPTACLE, 1/4 TURN, 6MM
11	204328	2	GROOVED CLEVIS PIN .5 X 3.00
12	204329	1	GROOVED CLEVIS PIN .5 X 2.50
13	204330	2	SHSS 3/8 X 1/4 X 1/2 THD LGTH
14	204335	3	E-CLIP .500 DIA
15	64942	1	12 VOLT RECEPTACLE ASSY

STANLEY

HYDRAULIC FLOW

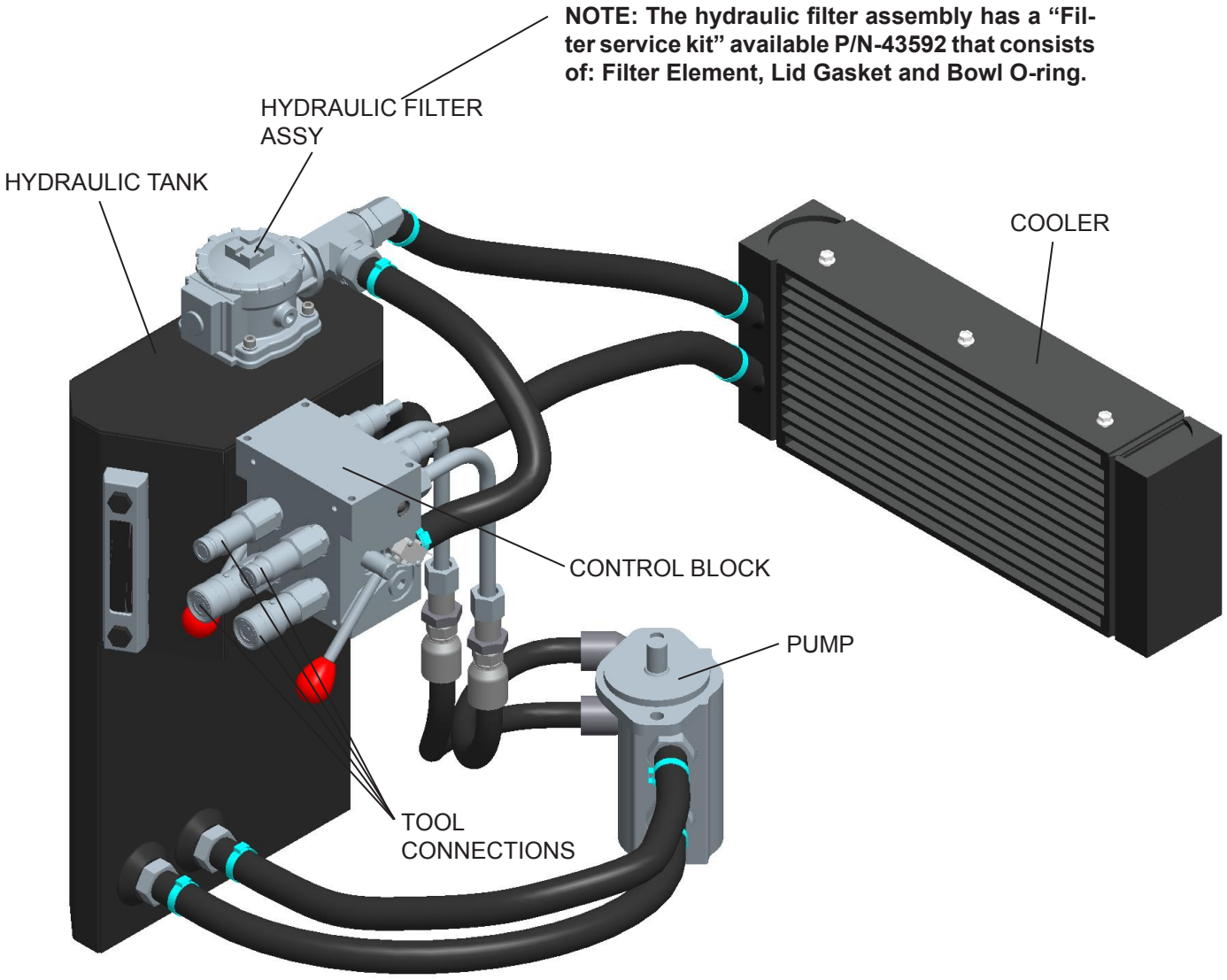

CONTROL BLOCK DETAIL

CONTROL BLOCK ASSEMBLY P/N-203051 (INCLUDES THE FOLLOWING)
Item 5 through 8, 13, 18, 20, 25, 27 through 29 and 53.

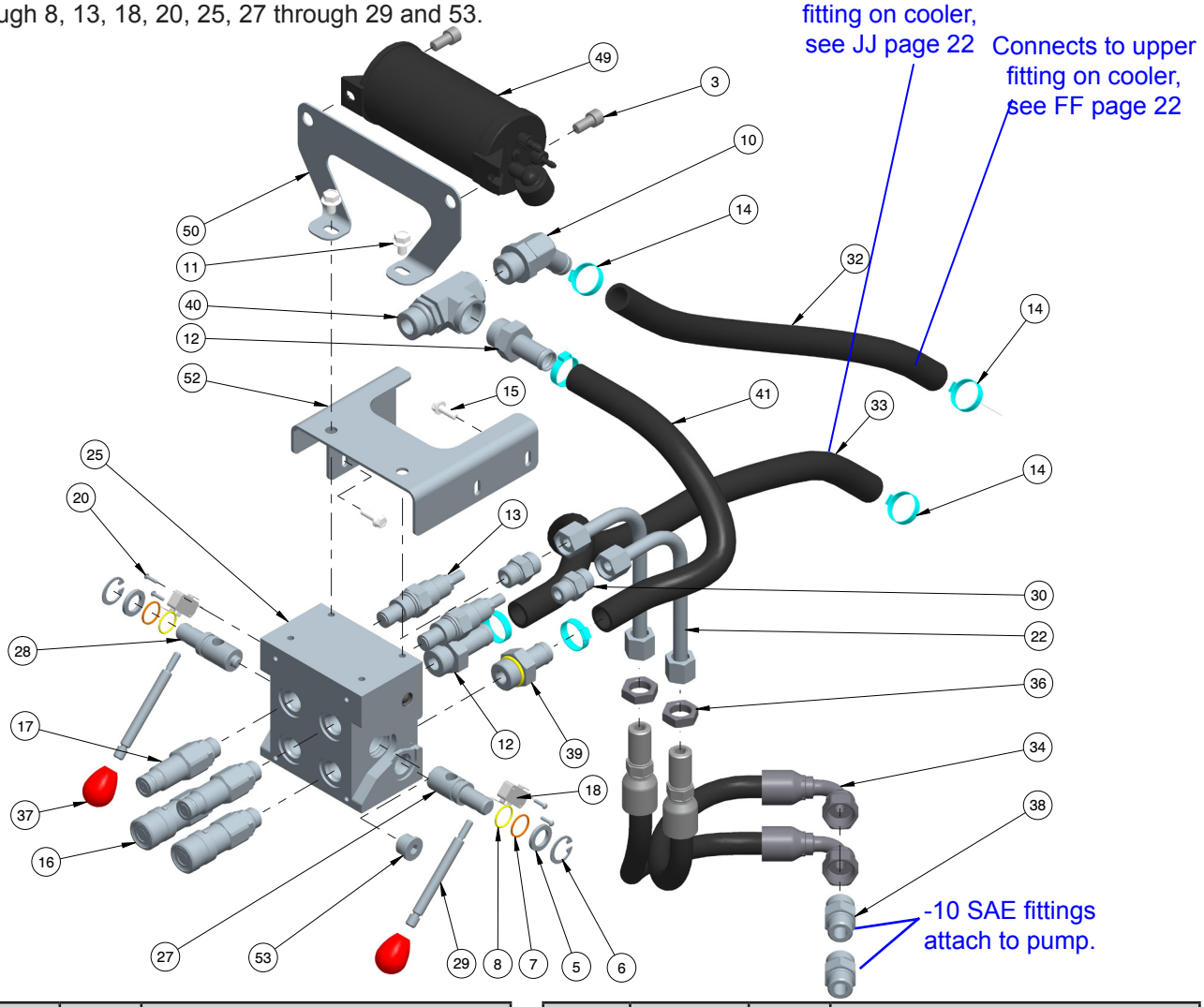

ITEM	P/N	QTY	DESCRIPTION
3	01525	2	CAPSCREW 3/8-16 X 3/4
5	04216	2	WASHER
6	04313	2	RETAINING RING
7	06988	2	BACK-UP RING
8	06989	2	O-RING
10	40364	1	ELBOW
11	40433	2	HEX FLANGE BOLT
12	59104	2	HOSE BARB 12SAE 3/4 HOSE
13	59131	2	RELIEF VALVE
14	62199	6	HOSE CLAMP
15	71939	4	HEX FLANGE BOLT
16	72397	2	COUPLER FEMALE PARKER
17	72398	2	COUPLER MALE PARKER
18	72414	2	MICRO LIMIT SWITCH
20	72455	4	CAPSCREW 4-40 x1/2 HSBH
22	202740	2	ASSY, MANIFOLD TUBE
25	203049	1	CONTROL BLOCK, DUAL

ITEM	P/N	QTY	DESCRIPTION
27	203052	1	SPOOL, ON-OFF, RH
28	203053	1	SPOOL, ON-OFF, LH
29	203054	2	ROD, ON-OFF SPOOL
30	203063	2	CONNECTOR, -8 SAE-1/2
32	203232	1	HOSE, COOLER-FILTER
33	203233	1	HOSE, COOLER-BLOCK
34	203245	2	HOSE, PRESSURE, PUMP
36	203246	2	JAM NUT
37	204332	2	KNOB, TAPERED, RED
38	204538	2	CONNECTOR, -10 SAE-5/8
39	204808	1	VALVE ASSY, ATM
40	204839	1	TEE, RUN, -12 SAE
41	204840	1	HOSE, BLOCK-FILTER
49	206046	1	CARBON CANISTER, 400CC
50	206055	1	BRACKET, CANISTER
52	207988	1	BRACKET, TANK MOUNT
53	350237	1	HOLLOW HEX PLUG - 8 SAE

STANLEY

HYDRAULIC & FUEL TANKS

HYDRAULIC TANK

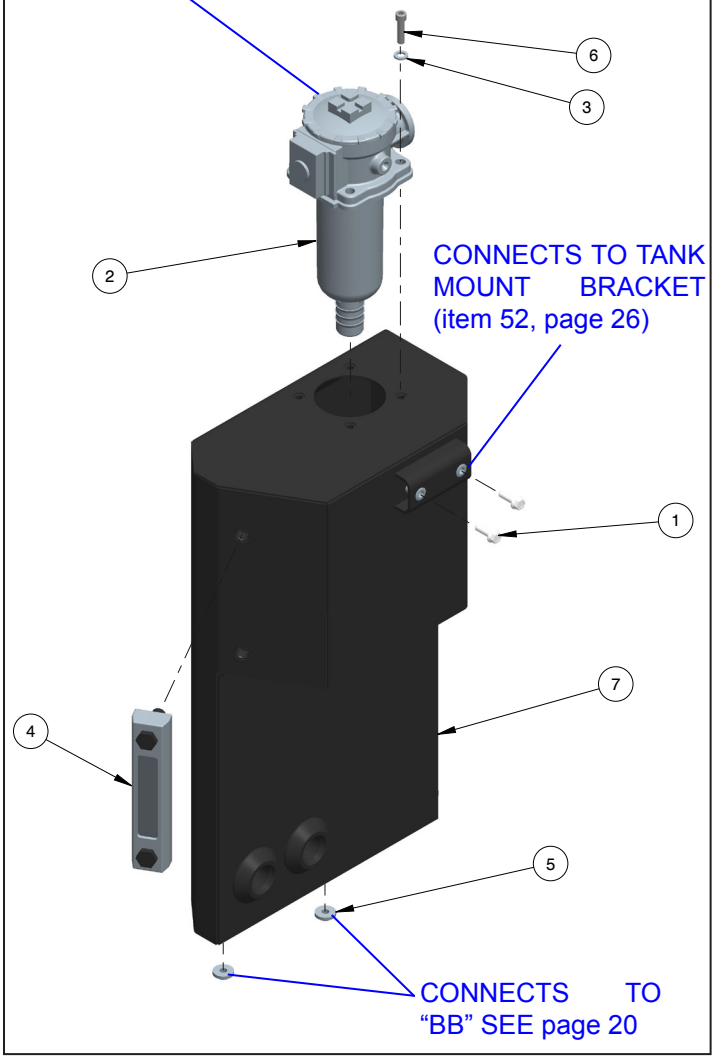

ITEM	P/N	QTY	DESCRIPTION
1	71939	4	HEX FLANGE BOLT
2	72405	1	FILTER HOUSING ASSY
3	203056	4	WASHER
4	203223	1	SIGHT GAUGE, 5" W/TEMP
5	203224	2	ISOLATOR, GROMMET
6	203253	5	CAPSCREW
7	207998	1	ASSEMBLY, HYD TANK

FUEL TANK

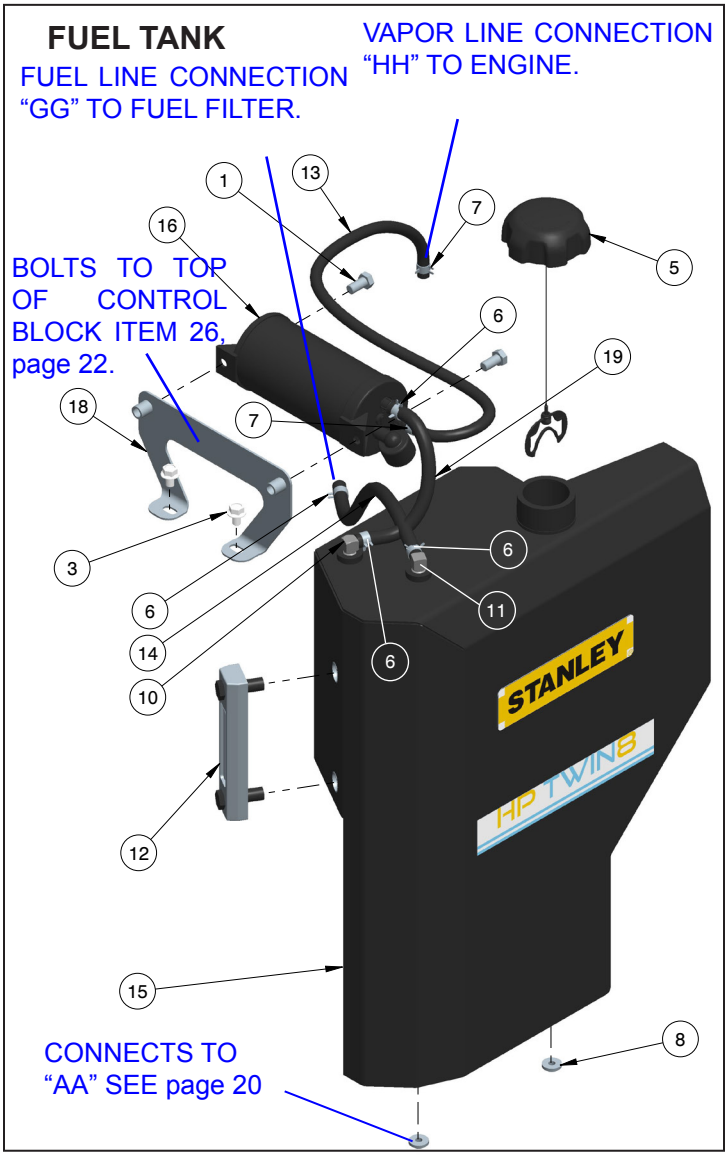

ITEM	P/N	QTY	DESCRIPTION
1	01525	2	CAPSCREW 3/8-16 X 3/4
3	40433	2	HEX FLANGE BOLT 5/16-18
5	71794	1	FUEL CAP
6	72317	4	5/16" SPRING HOSE CLAMP
7	72451	2	1/4" SPRING HOSE CLAMP
8	203224	2	ISOLATOR, GROMMET
10	204458	1	ELBOW, 90, 1/4 NPT
11	204459	1	FUEL PICKUP, 21", 1/4 NPT
12	204462	1	SIGHT GAUGE, 5", FUEL
13	204536	1	HOSE, VAPOR 72441X26.5
14	204537	1	HOSE, FUEL 04308X16
15	204842	1	ASSEMBLY, FUEL TANK
16	206046	1	CARBON CANISTER, 400CC
18	206055	1	ASSY, BRACKET
19	206057	1	HOSE, FUEL 04308X8

ELECTRICAL SCHEMATIC

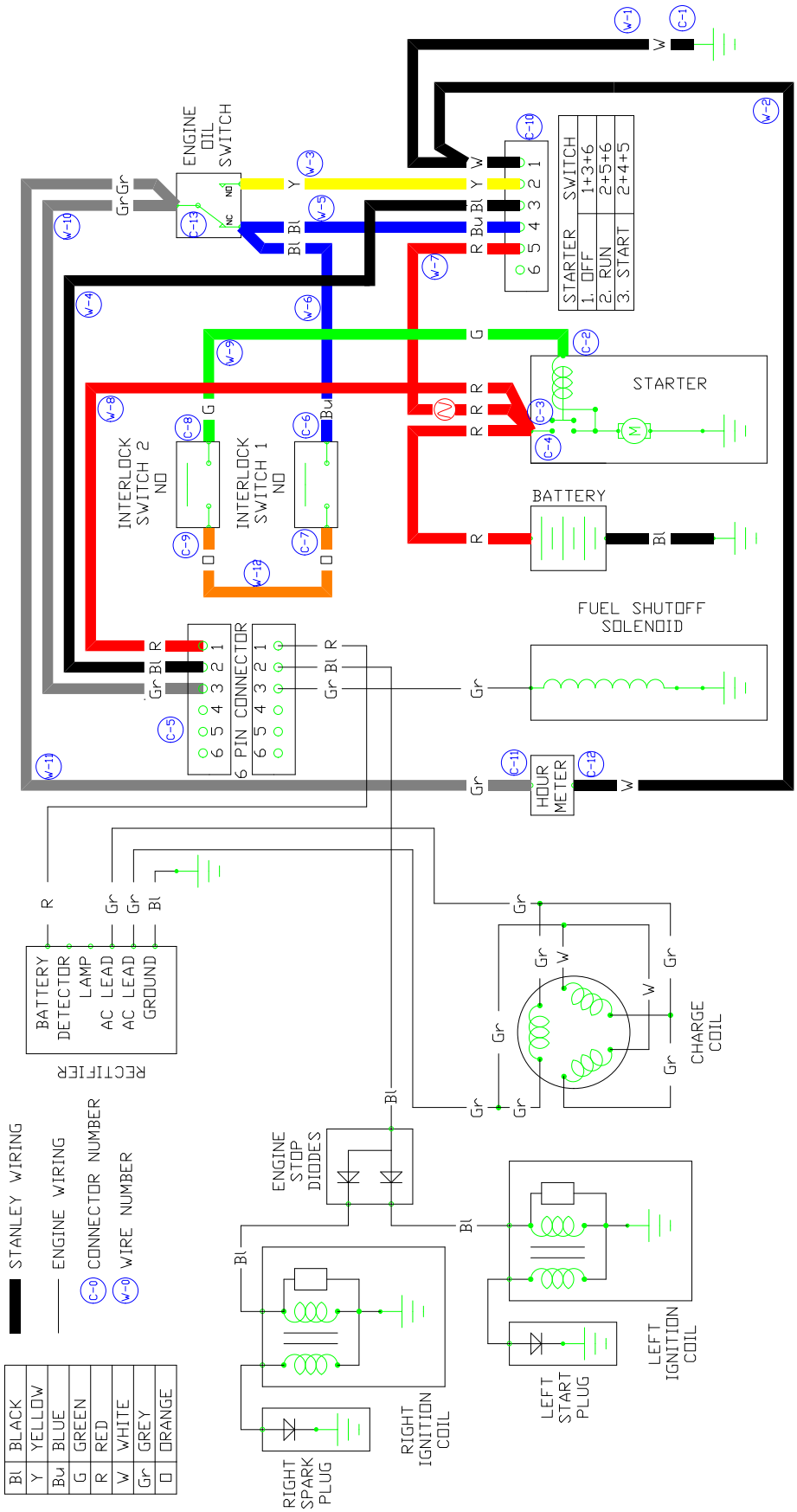

STANLEY

STANLEY®

Stanley Hydraulic Tools
3810 SE Naef Road
Milwaukie, Oregon 97267-5698 USA
(503) 659-5660 / Fax (503) 652-1780
www.stanleyhydraulics.com